Skyview BESS Inc.

Skyview 2 – Battery Energy Storage Project

Stormwater Management Report

2025-05-30

CA0047941.1010

Skyview 2 - Battery Energy Storage Project (BESS)

Stormwater Management Report

Skyview BESS Inc.

FINAL

Project No.: CA0047941.1010
Date: May 30, 2025

WSP
582 Lancaster Street West
Kitchener, ON
Canada N2K 1M3

F: +1 519 743-8778
wsp.com

May 30, 2025

FINAL

Skyview BESS Inc.
200 Wellington Street West, Suite 1102
PO Box 169
Toronto, Ontario M5V 3C7

Attention: Ben Saul

Dear Mr. Saul:

Subject: Skyview 2 BESS Stormwater Management Report

We are pleased to submit one electronic copy of the FINAL Stormwater Management report for the Skyview 2 BESS project. This report documents the Stormwater Management (SWM) objectives, approach, design and results.

We trust the submission of this documents meets your requirements. Should you have any comments we look forward to your response.

Yours sincerely,

Eeshan Kumar, P.Eng. P.M.P., P.E.
Senior Engineer, Water Resources

WSP ref.: CA0047941.1010

582 Lancaster Street West
Kitchener, ON
Canada N2K 1M3

F: +1 519 743-8778
wsp.com

Revision History

FIRST ISSUE

March 5, 2025	DRAFT for Review – 60% Design Submission	
Prepared by	Reviewed by	Approved by
Nupur Suthar, Designer, Water Resources	Eeshan Kumar, Senior Engineer, Water Resources	Bryan Orendorff, Manager, Water Resources

REVISION 1

May 16, 2025	Addressed Comments from the Town and Conservation Authority	
Prepared by	Reviewed by	Approved by
Nupur Suthar, Designer, Water Resources	Eeshan Kumar, Senior Engineer, Water Resources	Bryan Orendorff, Senior Manager, Water Resources

REVISION 2

May 30, 2025	Addressed Comments from the Client	
Prepared by	Reviewed by	Approved by
Nupur Suthar, Designer, Water Resources	Eeshan Kumar, Senior Engineer, Water Resources	Eeshan Kumar, Senior Engineer, Water Resources

FINAL

<Date>	<Remarks>	
Prepared by	Reviewed by	Approved by
<prepare, title>	<reviewer, title>	<approver, title>

Signatures

Prepared by

Nupur Suthar

2025-05-30

Nupur Suthar, E.I.T.
Designer, Water Resources

Date

Approved[1] by

Eeshan Kumar, P.Eng., P.M.P., P.E.
Senior Engineer, Water Resources

Date

WSP Canada Inc. (WSP) prepared this report solely for the use of the intended recipient, Skyview BESS Inc., in accordance with the professional services agreement. The intended recipient is solely responsible for the disclosure of any information contained in this report. The content and opinions contained in the present report are based on the observations and/or information available to WSP at the time of preparation. If a third party makes use of, relies on, or makes decisions in accordance with this report, said third party is solely responsible for such use, reliance or decisions. WSP does not accept responsibility for damages, if any, suffered by any third party as a result of decisions made or actions taken by said third party based on this report. This limitations statement is considered an integral part of this report.

The original of this digital file will be conserved by WSP for a period of not less than 10 years. As the digital file transmitted to the intended recipient is no longer under the control of WSP, its integrity cannot be assured. As such, WSP does not guarantee any modifications made to this digital file subsequent to its transmission to the intended recipient.

[1] Approval of this document is an administrative function indicating readiness for release and does not impart legal liability on to the Approver for any technical content contained herein. Technical accuracy and fit-for-purpose of this content is obtained through the review process. The Approver shall ensure the applicable review process has occurred prior to signing the document.

Contributors

Client

Project Manager	Ben Saul
Engineering Manager	Gabriel Parrot

WSP

Designer, Water Resources	Nupur Suthar
Senior Engineer, Water Resources	Eeshan Kumar
Senior Manager, Water Resources / QAQC	Bryan Orendorff
Proof (non-technical) / Format	Melinda Nowak
Manager, Civil - Renewables	Mark Edwards
Overall Project Manager	Nina Isinguzo

Subconsultants

N/A

TABLE OF CONTENTS

1 INTRODUCTION 1

1.1 Scope 1

1.2 Site Location 1

1.3 Stormwater Management Plan Objectives 1

1.4 Design Criteria 2

2 PREDEVELOPMENT CONDITIONS 3

2.1 General 3

2.2 Rainfall Information 3

2.3 PCSWMM Analysis 4

2.4 Allowable Flow Rates 5

2.5 Geotechnical Investigation 5

3 POST DEVELOPMENT CONDITIONS 6

3.1 General 6

3.2 PCSWMM Analysis 7

3.3 Quantity Control for Berry Municipal Drain 8

3.4 Quantity Control for Ferguson Municipal Drain 9

3.5 Quality Control for Berry and Ferguson Municipal Drain Outlets 10

4 SWM POND DESIGN 12

4.1 General 12

4.2 Storage Requirements 12

4.3 Aquatic Habitat Protection 13

5 SUBSTATION DRAINAGE 14

6 SPILL PREVENTION AND CONTAINMENT 15

6.1 Substation 15

6.2 BESS 15

6.3 SWM Pond 16

7 SURFACE WATER MAINTENANCE AND MONITORING PROGRAM 17

7.1 Overview 17

7.1.1 Background Monitoring Plan..... 17

7.1.2 Construction Monitoring Plan..... 18

7.1.3 Post-Construction Monitoring Plan 20

8 EROSION AND SEDIMENT CONTROL..... 22

9 CONCLUSIONS..... 23

Tables

Table 2-1: Rainfall Information 3

Table 2-2: Existing Subcatchment Parameters 4

Table 2-3: Fixed Subcatchment Parameters 4

Table 2-4: Existing Conditions Peak Flow Rates.. 5

Table 3-1: Land Cover and Imperviousness of the Proposed Site..... 7

Table 3-2: Proposed Subcatchment Parameters.. 7

Table 3-3: Water Level at the Proposed Culvert from PCSWMM 9

Table 3-4: Proposed Conditions Peak Flow Rates to Berry Municipal Drain 9

Table 3-5: Water Level at the Proposed Culvert from PCSWMM 10

Table 3-6: Proposed Conditions Peak Flow Rates to Ferguson Municipal Drain 10

Table 4-1: Proposed Pond Storage Requirements 12

Table 6-1: Spill Containment Volumes 16

Appendices

A Site Location

B Existing Conditions Drainage Mosaic

C Existing Conditions PCSWMM Analysis

C-1 PCSWMM Schematics

C-2 PCSWMM Outputs

D Proposed Conditions Drainage Mosaic

E Proposed Conditions PCSWMM Analysis

E-1 PCSWMM Schematics

E-2 PCSWMM Outputs

F Proposed SWM Pond Drawings

1 INTRODUCTION

1.1 Scope

Skyview BESS Inc. has engaged WSP Canada Inc. (WSP) to carry out the detailed design and prepare a stormwater management report of Skyview 2 - Battery Energy Storage Project (the Project), which is planned for the northwest side of Dobbie Road and Byker Road intersection in the Township of Edwardsburgh Cardinal, Ontario. This project will include a 411 MW / 4-hour lithium-ion Solbank 3.0 Battery Energy Storage System (BESS) that will connect to the existing 230 kV system.

This report is part of the overall development package submitted to the Township of Edwardsburgh Cardinal and should be reviewed alongside all other submitted documents.

1.2 Site Location

The site is located on a large agricultural field generally bound by Dobbie Road on the southwest side, the Dobbie Road and Byker Road intersection on the northeast side, an unopened road allowance for Branch Road North on the east side, and an extension of Pittdale Road on the north side. Additionally, the site is bound by the Crowder Municipal Drain to the north, Berry Municipal Drain centrally, and the Ferguson Municipal Drain to the south. Please refer to **Appendix A** for an aerial view of the site. This appendix has been reused from the Natural Heritage Study (SLR, 2025) to provide the most recent aerial view of the site.

The main component of the proposed Project will consist of a substation area, BESS area, temporary laydown area, access road, and transmission lines.

1.3 Stormwater Management Plan Objectives

The objectives of the stormwater management (SWM) plan are as follows:

- Determine site specific stormwater management requirements to ensure that the development is in conformance with the allowable release rates.
- Determine the stormwater management strategy that meets the site specific SWM requirements.

- Document the strategy along with the technical information necessary for the sizing of the stormwater management facilities.
- Reduce environmental risk by incorporating spill prevention and contingency measures within the design.

1.4 Design Criteria

The following documents have been reviewed as part of this study:

- DRAFT Stormwater Management Requirements and Checklists, South Nation Conservation (June 2024), hereinafter referred to as SWM Requirements (SNC, 2024).
- Edwardsburgh Cardinal Official Plan of the Township of Edwardsburgh Cardinal (November 2019).
- Stormwater Management Planning and Design Manual, Ministry of Environment, Conservation and Park (MECP) (former MOE) (March 2003), hereinafter referred to as SWM PDM (MECP, 2003).
- Skyview BESS Project, Technical Report Inundation Study, BBA (October 2024), hereinafter referred to as The Inundation Study (BBA, 2024).
- Final report - Geotechnical Investigation Design Report, LT1 Skyview BESS, WSP Canada Inc. (February 2025), hereinafter referred to as Geotechnical Investigation (WSP, 2025).
- Skyview 2 Battery Energy Storage Project, Natural Heritage Study, SLR (January 2025), hereinafter referred to as Natural Heritage Study (SLR, 2025).
- Ministry of Transportation (MTO) Drainage management manual (October 1997).

A summary of the SWM criteria applicable to this project are as follows:

- **Quantity Control:** Post-development flows must equal pre-development flows for all storms up to and including the 100-year event.
- **Quality Control:** Enhanced 80% long-term suspended solids removal.
- **Erosion Control:** Detain the first 25 mm of rainfall generated runoff from all new development for 24 hours.
- **Spill Prevention:** Provision for spill prevention, containment and contingency planning, including but not limited to, containment pits and a lined pond with automatic shut-off gate.

2 PREDEVELOPMENT CONDITIONS

2.1 General

The existing site, covering 15.46 ha, consists of agricultural land and is divided into three Subcatchments. Subcatchment 101 outlets north into Crowder Municipal Drain. Subcatchment 102 outlets east into Berry Municipal Drain. Subcatchment 103 outlets south into Ferguson Municipal Drain. There is a high point between Subcatchment 102 and 103, and a low point in Subcatchment 102 that serves as an outlet to Berry Municipal Drain.

The site receives drainage from 40.28 ha of external area. The external area has been divided into five Subcatchments: EXT-1 and EXT-2 outlet to Subcatchment 101, EXT-3 outlets to Subcatchment 102 and EXT-4 and EXT-5 outlet to Subcatchment 103. The drainage mosaic for the existing conditions is included in **Appendix B**.

Topographic survey of the existing site was completed between June to October, 2024, and made available to WSP's water resources team. This site does not have any existing drainage infrastructure and outlets overland to the outlets mentioned above.

2.2 Rainfall Information

SWM Requirements (SNC 2024) mention that rainfall depth should be based on the proper municipality's intensity-duration-frequency (IDF) curves. The Township of Edwardsburgh Cardinal does not have SWM specific criteria and the Official Plan refers to the SWM PDM (MECP, 2003). Therefore, IDF curves were obtained from the Ministry of Transportation IDF Curve Lookup tool for year 2025. Rainfall depths for return periods 2-year to 100-year for 24-hr duration is mentioned in **Table 2-1** below.

Table 2-1: Rainfall Information

Duration	Rainfall Depth (mm)
2-year	55.2
5-year	72.0
10-year	84.0
25-year	98.4
50-year	108.0
100-year	117.6

2.3 PCSWMM Analysis

Existing conditions hydrologic analysis was completed using PCSWMM version 7.6.3695 (64-bit).

Subcatchment parameters for the eight Subcatchments are listed in **Table 2-2** below.

Table 2-2: Existing Subcatchment Parameters

Subcatchment	Area (ha)	Imperviousness (%)	Curve Number
101	11.97	5.0	74
102	2.30	5.0	78
103	1.20	5.2	75
EXT-1	0.56	5.0	74
EXT-2	0.36	5.0	74
EXT-3	29.74	5.0	79
EXT-4	1.12	5.0	74
EXT-5	8.50	7.7	75
Total	55.74	5.4	-

Fixed Subcatchment parameters applicable to all the Subcatchments are identified in **Table 2-3** below which are consistent with the values presented in the City of Ottawa Sewer Design Guidelines.

Table 2-3: Fixed Subcatchment Parameters

Parameter	Dimension	Value
Manning's N for impervious area	-	0.013
Manning's N for pervious area	-	0.25
Depth of depression storage on impervious area	mm	1.57
Depth of depression storage on pervious area	mm	4.67

Soils within this area fall under the hydrologic soil groups of B and C as per Soil Survey Complex of Ontario. Curve Number (CN) infiltration method was used to calculate runoff infiltration into the existing site. CN values were obtained from MTO Drainage Management Manual Design Chart 1.09 Soil Conservation Service Curve Numbers based on hydrologic soil groups of B and C. CN values were calculated using the spatial weighting tool available in PCSWMM. Hydraulic soil conductivity was not assessed as part of the Geotechnical Investigation (WSP, 2024). Hence, Beyer's formula was used to calculate hydraulic soil conductivity (500.4 mm/hr) based on average grain size distribution from the Geotechnical Investigation (WSP, 2024).

2.4 Allowable Flow Rates

The SCS Type II design storm was chosen to calculate peak flow rates for the existing conditions at this site and comparison was made between the 12-hour and 24-hour storm duration. The 24-hour SCS Type II storm produced higher peak flows and was therefore selected for establishing target release rates for post-development conditions.

Table 2-4 lists the peak flow rates for existing conditions at each outlet, covering return periods from 2-year to 100-year. The PCSWMM schematics for existing conditions and detailed outputs are attached in **Appendix C**.

Table 2-4: Existing Conditions Peak Flow Rates

Outlet	Peak Runoff (L/s)					
	2 -yr	5-yr	10-yr	25-yr	50-yr	100-yr
Crowder Municipal Drain	131.5	192.3	245.2	319.5	381.7	454.6
Berry Municipal Drain	86.2	157.3	227.9	330.4	408.8	494.9
Ferguson Municipal Drain	38.5	80.2	119.7	177.3	221.7	270.7

2.5 Geotechnical Investigation

The geotechnical borehole investigation was carried out by WSP's Geotechnical team between November 4 and 8, 2024. Twenty boreholes including five monitoring wells with a depth ranging from 2.5 m to 6.1 m were advanced within the site. Four of the five monitoring wells are situated within the proposed BESS and substation area, laydown area, and access road. Groundwater levels were measured on November 22 and 27, 2024, with readings ranging from 2.9 m to 0.8 m below the ground surface.

3 POST DEVELOPMENT CONDITIONS

3.1 General

The proposed project will include a 411 MW / 4-hour lithium-ion Solbank 3.0 BESS system that will connect to the existing 230 kV system. The project site will encompass approximately 8.81 ha for the BESS and substation area, 3.45 ha for the temporary laydown area, and 3.20 ha for the access road area.

Subcatchments 101 to 104 represent the proposed BESS and substation area. Subcatchment 105 represents the temporary laydown area and Subcatchments 106 to 113 represent the proposed access road. The proposed conditions drainage mosaic is included in **Appendix D**.

Proposed ditches located on the perimeter of the BESS and substation area will collect and convey the runoff from Subcatchments 101 to 104 to the proposed wet SWM pond. The proposed wet SWM pond will be located at the northwest corner of the site. Ditches are proposed on both sides of the access road to collect and convey runoff from the temporary laydown area and access road, following the existing drainage pattern. A high point 550 m south of the proposed BESS and substation area will serve as a drainage divide for access road ditches. The segment north of this high point, referred to as the north access road ditches, will collect runoff from Subcatchments 105 to 109 and discharge into the Berry Municipal Drain via a proposed culvert at an existing low point. The segment south of the high point, referred to as the south access road ditches, will collect runoff from the remaining 391 m of access road connecting via a proposed culvert to Dobbie Road, which then conveys the runoff to the Ferguson Municipal Drain.

The proposed ditches will also receive drainage from 40.28 ha of external area. Subcatchments EXT-1, EXT-2, EXT-4 and EXT-5 under proposed conditions are maintained from the existing conditions. Subcatchment EXT-3 from existing conditions has been divided into three Subcatchments (EXT-3, EXT-4 and EXT-5) under proposed conditions. Subcatchment EXT-1 under proposed conditions will be collected and conveyed by the perimeter ditches around the BESS and substation area to the proposed wet SWM pond. Subcatchments EXT-2 to EXT-5 under proposed conditions will be collected and conveyed north via the access road ditches to Berry Municipal Drain. Existing conditions Subcatchments EXT-4 and EXT-5 are renamed to Subcatchments EXT-6 and EXT-7, respectively, and will be collected and conveyed by the south access road ditches to the Ferguson Municipal Drain.

3.2 PCSWMM Analysis

Proposed conditions hydrologic analysis was completed using PCSWMM version 7.6.3695 (64-bit). The proposed BESS and substation area is considered to be entirely impervious. The access road within the site will be constructed of gravel. Imperviousness of the proposed Subcatchments was calculated using the look up table and spatial weighting tool available in PCSWMM. Land cover and imperviousness look up table used for the proposed conditions are shown in **Table 3-1** below.

Table 3-1: Land Cover and Imperviousness of the Proposed Site

Land Cover	Imperviousness (%)
Impervious	100
Gravel	75
Laydown	50
Pervious	5

Subcatchment parameters for all the proposed and external Subcatchments are listed in **Table 3-2** below.

Table 3-2: Proposed Subcatchment Parameters

Name	Area (ha)	Imperviousness (%)	Curve Number
101	2.50	80.9	74
102	2.06	77.9	74
103	2.08	75.9	74
104	2.16	72.7	74
105	3.45	50.0	76
106	0.54	18.8	77
107	0.42	22.4	78
108	0.60	19.9	79
109	0.45	24.1	79
110	0.27	22.2	74
111	0.21	26.0	74
112	0.37	24.7	76
113	0.35	25.8	76
EXT-1	0.56	5.0	74
EXT-2	0.36	5.0	74
EXT-3	4.83	5.0	75
EXT-4	12.34	5.0	81
EXT-5	12.58	5.0	80

Name	Area (ha)	Imperviousness (%)	Curve Number
EXT-6	1.12	5.0	74
EXT-7	8.50	7.7	75
Total	55.74	20.6	-

Manning's N for pervious area (0.25), depth of depression storage on impervious area (1.57 mm) and depth of depression storage on pervious area (4.67 mm) were maintained from the existing conditions and noted in **Table 2-3**. A Manning's N for impervious area of 0.025 was used for the proposed Subcatchments due to the change in impervious area. A Manning's N for impervious area of 0.013 was maintained for the external Subcatchments.

Curve Number (CN) infiltration method was used to calculate runoff infiltration. CN values and hydraulic soil conductivity were calculated using the same method as mentioned in Section 2.3.

3.3 Quantity Control for Berry Municipal Drain

Runoff from Subcatchments 105 to 109 and EXT-2 to EXT-5 is collected and conveyed by the north access road ditches to Berry Municipal Drain via a proposed culvert. These ditches have a trapezoidal cross-section with a bottom width of 2 m, depth of 1.5 m from the top of the final graded surface and side slopes of 3:1 (H:V). Where necessary, ditches have been elevated to ensure the ditch bottom does not intersect with the water table. Ditches have been modelled as conduits in PCSWMM. Rock check dams are proposed to slow down the flow of water to reduce erosion and allow for settling. Additionally, the check dams cross sectional area will promote storage within the ditches. Rock check dams will be located approximately 20 m upstream and downstream of the proposed culvert connecting to the north access road ditches. Rock check dams have been modelled as trapezoidal weirs with a depth of 0.2 m, width of 0.5 m and side slopes of 3:1 (H:V) in PCSWMM. A 300 mm diameter culvert has been proposed to connect to the Berry Municipal Drain. Additionally, a smaller diameter culvert is proposed to ensure controlled outflow release to the Berry Municipal Drain. PCSWMM schematics for proposed conditions and detailed outputs are attached in **Appendix E**.

Table 3-3 shows that the water level in the proposed north access road ditch at the upstream end of the proposed culvert will be at its full depth and may overtop the access road during the 25-yr to 100-yr return periods.

Table 3-3: Water Level at the Proposed Culvert from PCSWMM

Berry Municipal Drain	Water level (m)					
	2 -yr	5-yr	10-yr	25-yr	50-yr	100-yr
Depth of the Ditch	1.5					
Upstream of the Culvert	0.37	0.86	1.27	1.5	1.5	1.5
Downstream of the Culvert	0.22	0.30	0.30	0.30	0.30	0.30

As noted in Section 2.4, the 24-hour SCS Type II storm has been selected for this site to calculate proposed conditions peak flow rates. **Table 3-4** compares the peak flow rates for existing and proposed conditions to the Berry Municipal Drain. It shows that the proposed conditions' peak flow rates are lower than the existing conditions' peak flow targets for return periods from 2-year to 100-year, except for 5-year and 10-year return periods. The design will be refined to match peak flows from proposed conditions for 5-year and 10-year return periods to existing conditions in the final design and construction drawings phase.

Table 3-4: Proposed Conditions Peak Flow Rates to Berry Municipal Drain

Berry Municipal Drain	Peak Runoff (L/s)					
	2 -yr	5-yr	10-yr	25-yr	50-yr	100-yr
Existing Conditions	86	157	228	330	409	495
Proposed Conditions	83	177	236	281	288	291

3.4 Quantity Control for Ferguson Municipal Drain

Runoff from Subcatchments 112 to 113 and EXT-6 and EXT-7 is collected and conveyed by the south access road ditches to the Ferguson Municipal Drain via a proposed culvert. The proposed ditches will have a trapezoidal cross-section with a bottom width of 2 m, depth of 1.5 m from the top of the final graded surface and side slopes of 3:1 (H:V) and are modelled as such in PCSWMM. Where necessary, ditches have been elevated to ensure the ditch bottom does not intersect with the water table. Rock check dams are proposed to slow down the flow of water to reduce erosion and allow for settling. Additionally, the check dams cross sectional area will promote storage within the ditches . Rock check dams are proposed to be spaced apart at irregular intervals along the south access road ditches. Rock check dams have been modelled as identified in **Section 3.3**. A culvert with a diameter of 300 mm has been proposed to

connect to the Ferguson Municipal Drain. A smaller diameter culvert has been proposed to achieve controlled outflow release to the Ferguson Municipal Drain.

Table 3-5 shows the water level in the proposed south access road ditch at the upstream end of the proposed culvert for the 2-year to 100-year return periods. The proposed south access road ditch at the upstream end of the proposed culvert will have approximately 0.99 m of freeboard during the 100-year return period.

Table 3-5: Water Level at the Proposed Culvert from PCSWMM

Ferguson Municipal Drain	Water level (m)					
	2 -yr	5-yr	10-yr	25-yr	50-yr	100-yr
Depth of the Ditch	1.5					
Upstream of the Culvert	0.08	0.13	0.17	0.25	0.37	0.51
Downstream of the Culvert	0.08	0.13	0.18	0.25	0.27	0.29

Table 3-6 below shows the comparison between existing and proposed conditions peak flow rates to the Ferguson Municipal Drain. **Table 3-6** identifies that proposed conditions peak flow rates are lower than the peak flow targets under existing conditions for the 2-year to 100-year return periods.

Table 3-6: Proposed Conditions Peak Flow Rates to Ferguson Municipal Drain

Ferguson Municipal Drain	Peak Runoff (L/s)					
	2 -yr	5-yr	10-yr	25-yr	50-yr	100-yr
Existing Conditions	38	80	120	177	222	271
Proposed Conditions	15	40	65	103	132	163

3.5 Quality Control for Berry and Ferguson Municipal Drain Outlets

The north and south access road ditches will be seeded with grass and will collect the runoff from the proposed access road, temporary laydown area and external area and convey it to the existing outlets at the Berry Municipal Drain and the Ferguson Municipal Drain. Naturalizing the ditches will enhance water quality by functioning as a sediment trap, providing erosion control and improving the filtration of runoff before it discharges into the municipal drains. The proposed site will experience minimal human activity, except for maintenance purposes. Vehicular traffic on the proposed access road for maintenance will also be limited. Any potential contaminant (i.e. fuel) to be stored within

the laydown area will have secondary containment to reduce the potential for an accidental release. Additional water quality treatment will not be provided for the Subcatchments outletting to the grassed access road ditches. Water quality will be maintained by the rock dams and naturalized channels, therefore additional water quality treatment beyond the aforementioned is not required.

4 SWM POND DESIGN

4.1 General

Runoff from Subcatchments 101 to 104 and EXT-1 will be collected and conveyed by perimeter ditches to the proposed SWM pond. Perimeter ditches will be 1 m deep, 1 m wide at the bottom and will have a 3:1 (H:V) side slope. Where necessary, ditches have been elevated to ensure the ditch bottom does not intersect with the water table. The proposed SWM pond will be a wet SWM pond and will provide quantity control for the 2-year to 100-year return periods, quality control (Enhanced Level Protection or 80% TSS removal) and erosion control (i.e., detain runoff from a 25 mm rainfall event for 24 hours) for the proposed BESS and substation area. The wet SWM pond will release the controlled outflows to Crowder Municipal Drain. The proposed access road Subcatchments will outlet to Berry and Ferguson Municipal Drains via grassed access road ditches and will not receive additional treatment as mentioned in Section 3.5.

The proposed wet pond will have a forebay which will help achieve 80% TSS removal. Erosion control requirements to detain runoff from a 25 mm rainfall event for 24 hours will be achieved through a permanent pool depth of 1 m in addition to an extended detention level in the pond. The proposed pond drawings are included in **Appendix F**.

4.2 Storage Requirements

The storage requirements for the proposed pond to meet the target release rates under post development conditions are shown in **Table 4-1**:below.

Table 4-1: Proposed Pond Storage Requirements

Return Period	Target Release Rates (m^3/s)	Proposed Pond Inflows (m^3/s)	Proposed Pond Outflows (m^3/s)	Storage Requirement from PCSWMM (m^3)
25 mm	N/A	0.744	0.104	674
2-yr	0.132	1.072	0.122	1155
5-yr	0.192	1.508	0.135	1626
10-yr	0.245	1.834	0.143	1989
25-yr	0.320	2.236	0.151	2449
50-yr	0.382	2.508	0.157	2768
100-yr	0.455	2.766	0.162	3096

Storage volumes mentioned above are calculated in PCSWMM using an outlet pipe of 250 mm. The pond storage curve for this calculation was developed based on an approximate pond area of 7,860 m^2 and a total depth of about 2.5 m. Detailed design of the pond forebay, outlet structure, drawdown time and stage-storage-discharge relationship will be assessed in the future design phase. The level of design details provided in this report are in conformance with the standard 60% design level.

4.3 Aquatic Habitat Protection

Crowder Municipal Drain is a fish-bearing waterbody. The fish community was observed in the Crowder Municipal Drain during the Natural Heritage Study (SLR, 2025). The site investigations and fish collection study indicate that a cool-water thermal regime exists in the Crowder Municipal Drain. For this reason, thermal mitigation has been included into the proposed SWM design for added treatment performance and the protection of fish habitat.

The linear configuration of the proposed SWM pond will be long and narrow to reduce surface area to minimize solar heating, preventing warmer water from entering and disrupting the thermal regime within the Crowder Municipal Drain.

The location of the headwall can reduce potential impacts to fish habitat. The proposed headwall location will be appropriately positioned well back from the Crowder Drain for the protection of fish habitat. Under scenario, SWM discharge would outlet to a headwall constructed on the margin of the 30 m setback and a cobble lined ditch constructed to direct flow toward the Crowder Municipal Drain.

The proposed SWM pond has been designed to achieve 80% TSS removal to mitigate sediment loading into the Crowder Municipal Drain.

5 SUBSTATION DRAINAGE

Under the proposed conditions, 1.56 ha of the site will be developed for the substation, and 7.25 ha BESS area. This does not include the proposed gravel access road (3.44 ha) or the contractor's laydown area (3.20 ha). The substation will be built with spill containment, as outlined below.

The substation will include five transformers, and each transformer will be designed with spill containment. Details of the spill containment design criteria are provided below:

- Each transformer containment pit will have a minimum storage volume equal to the volume of transformer oil and lubricants plus the volume equivalent to providing a minimum 24-hour duration, 50-year return storm capacity (calculated using the 50-year rainfall of 103 mm).
- A reinforced concrete floor with walls sloped toward an outlet oil control device, allowing for a freeboard of 0.25 metres terminating approximately 0.30 metres above grade to prevent external stormwater flows from entering the facility.
- A 300 mm diameter pipe connecting the five transformer spill containment pits towards the oil-water separator.

The containment in this area is separated from the rest of the site. In the event of an accidental release, the substation area has been designed with an oil-water separator cast-in-place holding tank located just north-west of the spill containment pits, with internal dimensions of approximately 20 m x 3.5 m x 2.40 m, and designed to accommodate up to and including a 50-year return storm runoff and the total volume of oil and lubricant from a single transformer.

6 SPILL PREVENTION AND CONTAINMENT

A detailed spill management plan for the site will be prepared as part of the detailed design. High level details of the proposed plan are provided below reference.

6.1 Substation

The Substation includes five transformers, and each transformer will be designed to contain any liquid spills from the transformer. Pipework connecting each transformer containment pits will be collected and conveyed towards an oil-water separator.

Within the oil-water separator, sediment, heavy solids and concentrated oil are removed from the contaminated water which is then by gravitational flow discharged into the downstream ditch and SWM pond.

6.2 BESS

The SolBank 3.0 is a containerized energy storage solution that provides enhanced operational efficiency, reliability and safety.

No spillable liquid electrolyte is present and these cells do not contain free-flowing electrolyte, as the electrolyte is largely absorbed within the cell structure, significantly reducing leakage risks. Also note that the SolBank 3.0 Enclosure Ingress Rating is IP55 / NEMA 3R which protects and ensures water will not spill out and will be contained within the enclosure in case of an unlikely event.

- **Non-spillable battery electrolyte.** Each SolBank 3.0 unit houses 48 lithium iron phosphate (LFP) battery packs, each containing 104 sealed cells with no free-flowing liquid. The cell configuration datasheet notes that the LFP electrolyte is non-spillable.
- **Closed-loop cooling system.** Approximately 200 liters of ethylene glycol/water coolant are circulated through sealed lines. Leak and pressure sensors trigger alarms if a leak is detected.
- **Minimal auxiliary fluids.** The small, sealed UPS battery contains roughly 0.3 liters of sulfuric acid and does not require separate containment. This sealed battery volume is considered negligible.

— **IP55-rated enclosure.** All components are protected within a weather-resistant, dust- and water-jet–proof container which specifies the enclosure's ingress-protection rating and highlights that any fluid release remains contained.

Grassed perimeter ditches around the BESS facility will convey surface water to the SWM pond. These ditches do not require spill containment and are not lined.

6.3 SWM Pond

A canal gate on the outlet of the proposed SWM pond has been provided to contain, in an emergency, spill water from the oil-water separator connected with the transformer pits. The gate will be monitored and controlled remotely and can be closed immediately in the event of a fire.

The pond has been sized to account for the volume requirement for the 100-year return period event, water from the oil-water separator (75 m^3) and additional firewater (24,000 gallons / 91 m^3) provided by the fire reservoir tanks.

In a worst-case scenario the canal gate will be automatically closed to prevent the discharge of impacted water from within the SWM Pond into the Crowder Municipal Drain. The perimeter ditches have been designed with enough storage capacity to meet the 2-year to 100-year return periods.

With the closed gate, the storage requirements are presented in Error! Reference source not found.

Table 6-1: Spill Containment Volumes

Return Period	Pond Volume (m^3)	Water from oil-water separator (m^3)	Firewater from the fire reservoir tanks (m^3)	Total volume with closed gate (m^3)
25 mm	1132	75	91	1298
2-yr	2648			2814
5-yr	3540			3706
10-yr	3984			4150
25-yr	3998			4164
50-yr	4001			4167
100-yr	4009			4175

7 SURFACE WATER MAINTENANCE AND MONITORING PROGRAM

7.1 Overview

The SWM strategy for the Skyview BESS Facility includes the establishment and implementation of a construction monitoring program for a minimum period of three years. After three years of satisfactory performance of the work, the Owner may request to reduce the frequency of or discontinue the surface water monitoring program with Director approval, following review of the surface water monitoring report.

The objective of the monitoring program is to:

- Surface water monitoring location;
- Surface water sampling procedures;
- Parameters to be monitored and monitoring frequency;
- Compliance triggers and response plan specifying appropriate action to be taken in the event of compliance trigger exceedances.

Skyview will construct, operate, and maintain the Works with the objective that the effluent is free of floating debris and settleable solids and does not contain oil or visible evidence of a film, sheen, foam or discoloration on the effluent though visual inspections.

Skyview shall undertake an inspection of the Sewage Works, including all ditches, inlet and outlet of the SWM pond and undertake any necessary cleaning and maintenance to ensure that sediment, debris and excessive decaying vegetation from the Sewage Works are removed to prevent the excessive buildup of sediment, oil/grit, debris and/or decaying vegetation, to ensure the operation and treatment capacity of the Works is maintained.

7.1.1 Background Monitoring Plan

<u>Parameter and Units</u>

- Total Suspended Solids (TSS) (mg/L) at Crowder Municipal Drain, Berry Municipal Drain and Ferguson Municipal Drain.
- pH at Crowder Municipal Drain.

— Turbidity (NTUs) at Crowder Municipal Drain, Berry Municipal Drain and Ferguson Municipal Drain.
— Water temperature (°C) at Crowder Municipal Drain.

Location

— Crowder Municipal Drain (CMD1) at the proposed SMW discharge point.
— Berry Municipal Drain at the proposed outlet location.
— Ferguson Municipal Drain at the proposed outlet location.

Sample Type

— Grab samples at Crowder Municipal Drain, Berry Municipal Drain and Ferguson Municipal Drain.
— Crowder Municipal Drain should have a water temperature recorder installed at the SWM discharge location for establishing seasonal variability in background temperature data within the Drain.

Frequency

— Turbidity, TSS and pH measurements taken every two weeks April to November. Sampling Frequency to be adjusted if construction begins earlier than proposed. (Minimum of 10 samples required spaced over the pre-construction period)
— CMD1 Temperature recorder set at 8-hour intervals 7am, 3pm, 11pm daily from April to November.

7.1.2 Construction Monitoring Plan

The period of construction is when the most likely impacts of sediment runoff will occur at the site if ESC measures are not properly installed and inspected. The reviewer is satisfied with the proposed ESC measures in the WSP Stormwater report. The purpose of the construction monitoring is to:

i) Assess the effectiveness of ESC measures in reducing potential runoff impacts to the Drains by comparison to background data and;

ii) Assess impacts to fish habitat (water temperature and turbidity) in CMD.

Parameter and Units

— Total Suspended Solids (TSS) (mg/L)
— pH
— Turbidity (NTUs)
— Water temperature (°C)

Location

- Crowder Municipal Drain (CMD1) at the proposed SMW discharge point.
- Berry Municipal Drain at the proposed outlet location.
- Ferguson Municipal Drain at the proposed outlet location.

Sample Type

- Grab for all locations.
- Crowder Municipal Drain should have a water temperature recorder installed at upstream and downstream of the SWM discharge location (Crowder Municipal Drain) for monitoring potential temperature impacts from runoff at the outlet location on the Crowder Municipal Drain.

Frequency

- Turbidity measurements taken weekly at all locations.
- TSS and pH measurements taken every two weeks. Crowder Municipal Drain temperature recorders set at 8-hour intervals 7am, 3pm, 11pm daily.

Compliance Triggers

- TSS, temperature and pH: Concentrations and measurements must be in the range of the average monthly background concentration plus two standard deviations for each location and each month.
- Turbidity measurements cannot exceed the CWQG guideline of 8 NTUs above the average background concentrations for each location.

Compliance Exceedances

Any exceedance of the compliance objectives will trigger an inspection of ESC measures for that sub-watershed area and any corrections made. Effectiveness of corrected measures can be confirmed during the next sampling event. If exceedances continue to occur, the Kingston District Office should be notified, and additional ESC measures proposed for approval by the district.

Visual Inspections

Silt fences and other ESC measures should be inspected every 2 weeks and after significant storm events (>25 mm in 24-hour period) for deficiencies or repairs.

7.1.3 Post-Construction Monitoring Plan

Parameter and Units

- Total Suspended Solids (TSS) (mg/L)
- Water temperature (°C)
- Oil and Grease
- pH

Location

- SWMP inlet and outlet
- Oil and Grease Separator Outlet.
- Crowder Municipal Drain upstream of SWMP discharge location and Crowder Municipal Drain downstream of SWMP discharge location.
- Berry Municipal Drain at the proposed outlet location.
- Ferguson Municipal Drain at proposed outlet location.

Sample Type

- Grab for all locations.

Frequency

- Three Times Annually: Spring, Summer fall for initial three years.
- Samples will be obtained for water quality testing during periods of active discharge or within 24 hours of a rainfall event greater than 25 mm.

Compliance Triggers

- TSS and water temperature.
- TSS concentrations of the outlet of the SWMP shall be 80% less than TSS concentrations of the inlet.
- Oil and Grease Concentrations at the OGS outlet shall be less than 10 mg/L.
- Water temperature in the CMD at the downstream location must in the range of the monthly average background temperature plus two standard deviations for each month in which the discharge occurs.
- Alternatively, downstream water temperature cannot exceed upstream by more than 5°C.

Compliance Exceedances

Any exceedance of the compliance objectives will trigger an inspection of site stormwater management features and corrective measures taken as required. If exceedances continue to occur the Kingston District Office should be notified and additional ESC measures proposed for approval by the District.

Visual Inspections

Skyview shall undertake an inspection of the Sewage Works, including all ditches, inlet and outlet of the SWM pond and undertake any necessary cleaning and maintenance to ensure that sediment, debris and excessive decaying vegetation from the Sewage Works are removed to prevent the excessive build-up of sediment, oil/grit, debris and/or decaying vegetation, to ensure the operation and treatment capacity of the Works is maintained.

8 EROSION AND SEDIMENT CONTROL

During construction, there is a potential for short-term sediment wash-off from the site. To protect the downstream receiving system and other natural features, on-site sediment control measures are necessary during construction.

As sediment and erosion control strategies focus on minimizing adverse environmental impacts by restricting the mobilization and transport of sediment, the following general practices will be observed:

- Sediment and erosion control works must be in place prior to the commencement of construction and not removed until the end of the construction period, when the site has been stabilized.
- Construction phasing must be scheduled to minimize the extent and period to which disturbed soils are exposed to weathering. As such, all disturbed areas must be stabilized as quickly as possible. Stabilization of disturbed areas may be accomplished by sodding, seeding, mulching, hydro-seeding, planting, or covering of constructed slopes with appropriate material such as geotextile or jute mesh.
- Access to the construction site must be minimized.
- A continuous siltation fence must be constructed along the perimeter of the proposed development. The silt fence must be in place prior to the commencement of construction and must be removed at the end of the construction period. Maintenance records will be maintained and made available to the MECP upon request.
- Silt fence should be inspected every 2 weeks and after significant storm events (>25 mm in 24 hour period) for deficiencies or repairs.

Maintenance records will be maintained and made available to the MECP upon request.

9 CONCLUSIONS

Skyview BESS Inc. has retained WSP Canada Inc. (WSP) to complete the detailed design and a stormwater management report of Skyview 2 - Battery Energy Storage System (BESS) proposed at the northwest side of Dobbie Road and Byker Road intersection in the Township of Edwardsburgh Cardinal, Ontario. This project will include a 411 MW / 4-hour lithium-ion Solbank 3.0 BESS that will connect to the existing 230 kV system.

The proposed site will include a substation area, BESS area, temporary laydown area, access road, and transmission line, covering a total of 15.46 ha. Of this, 1.56 ha will be developed for the substation, 7.25 ha for the BESS area and the remaining area will be allocated for the SWM pond, gravel access road and temporary laydown area.

Runoff from the proposed substation and BESS area will be collected and conveyed by the proposed perimeter ditches around this area. This runoff will be retained and treated by the proposed wet SWM pond located northwest of this area and released in a controlled manner via a 250 mm outlet pipe to the Crowder Municipal Drain. Hydrologic analysis for this site was completed using PCSWMM. Volume requirements for the proposed pond for the 100-year return period is 3096 m^3. The pond will also provide 674 m^3 of storage to detain 25 mm of rainfall over 24 hours for erosion control. Detailed design of the pond outlet structure and stage-storage-discharge relationship will be completed in the next design phase. The pond will be equipped with a canal gate at its outlet to contain firewater from the fire reservoir tanks and spill from the transformer pits.

Runoff from the access road will be collected and conveyed by grassed ditches along the north and south access roads to the Berry Municipal Drain and Ferguson Municipal Drain, respectively, via 300 mm culverts. This runoff will be considered free of debris and will not undergo additional treatment.

APPENDIX

A Site Location

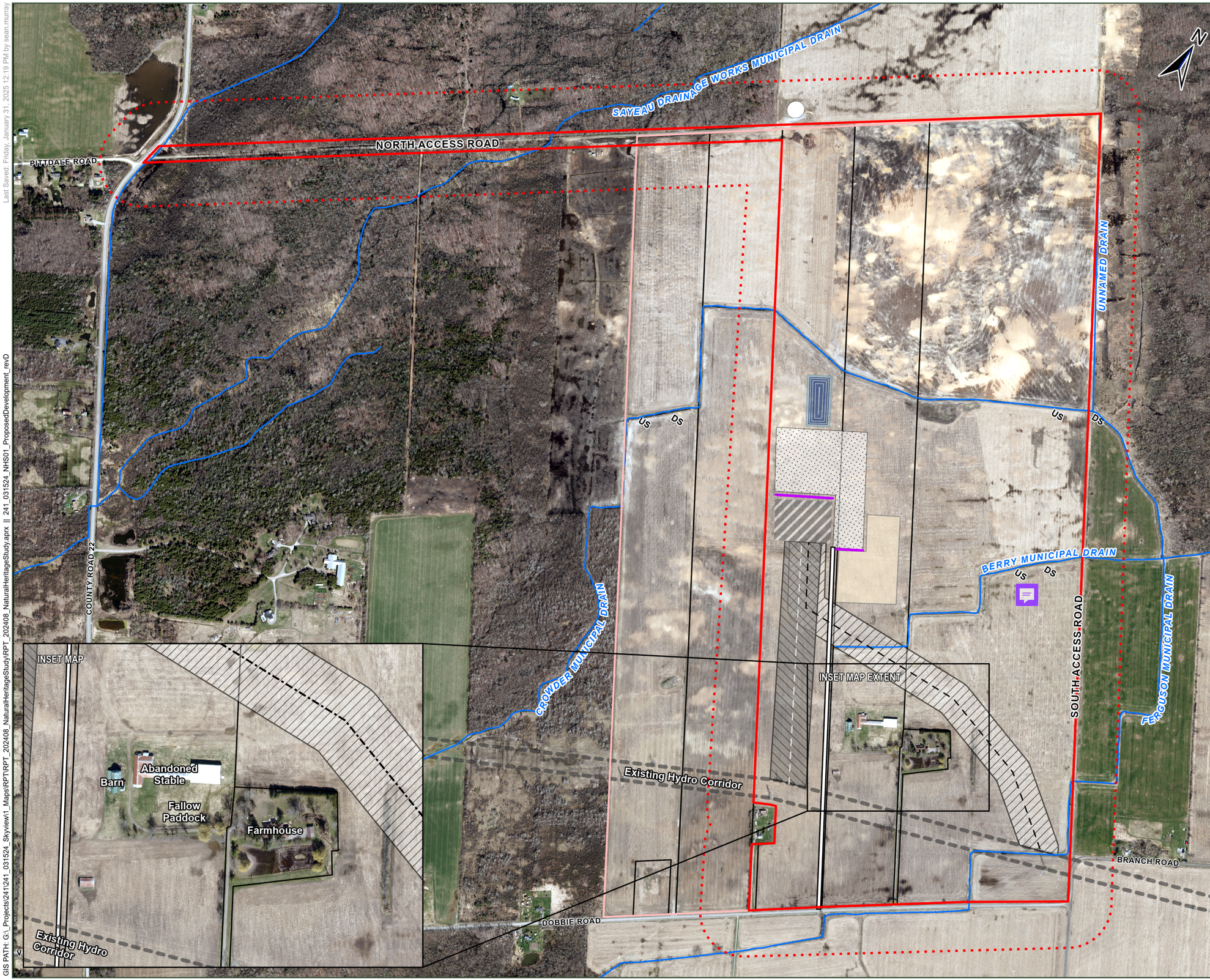

LEGEND:

- HEADWATER DRAINAGE FEATURE (HDF)
- EXISTING HYDRO CORRIDOR
- NEW TRANSMISSION LINE OPTION 1
- NEW TRANSMISSION LINE OPTION 2
- PROPOSED 7M HIGH NOISE WALL
- LEGAL PIN
- SUBJECT AREA (APPROXIMATE)
- SUBJECT SITE (APPROXIMATE)
- STUDY AREA
- PROPOSED ACCESS ROAD = 1.0 KM
- OPTION 1: TRANSMISSION LINE EASEMENT
- OPTION 2: TRANSMISSION LINE EASEMENT
- PROPOSED BESS AREA
- PROPOSED STORMWATER POND
- PROPOSED LAYDOWN AREA
- PROPOSED SUBSTATION AREA

DRAFT

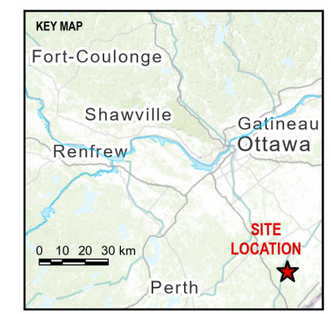

NOTES:
Basemap and Imagery Source: First Base Solutions (2024)

0 100 200 400 600 m

SCALE: 1:10,000
PAGE SIZE 11 x 17
NAD 1983 UTM Zone 18N
THIS MAP IS FOR CONCEPTUAL PURPOSES ONLY AND SHOULD NOT BE USED FOR NAVIGATION

SKYVIEW BESS INC.
SKYVIEW 2 BATTERY ENERGY STORAGE SYSTEM

NATURAL HERITAGE STUDY

PROJECT LOCATION

SLR

FIGURE NO: 1

DATE: January 31, 2025

PROJECT NO: 241.031524.00001

GIS PATH: G:_Projects\241\241_031524_Skyview1_Maps\RPT\RPT_202408_NaturalHeritageStudy\RPT_202408_NaturalHeritageStudy.aprx || 241_031524_NHS01_ProposedDevelopment_revD
Last Saved: Friday, January 31, 2025 12:19 PM by sean.murray

APPENDIX

B

Existing Conditions Drainage Mosaic

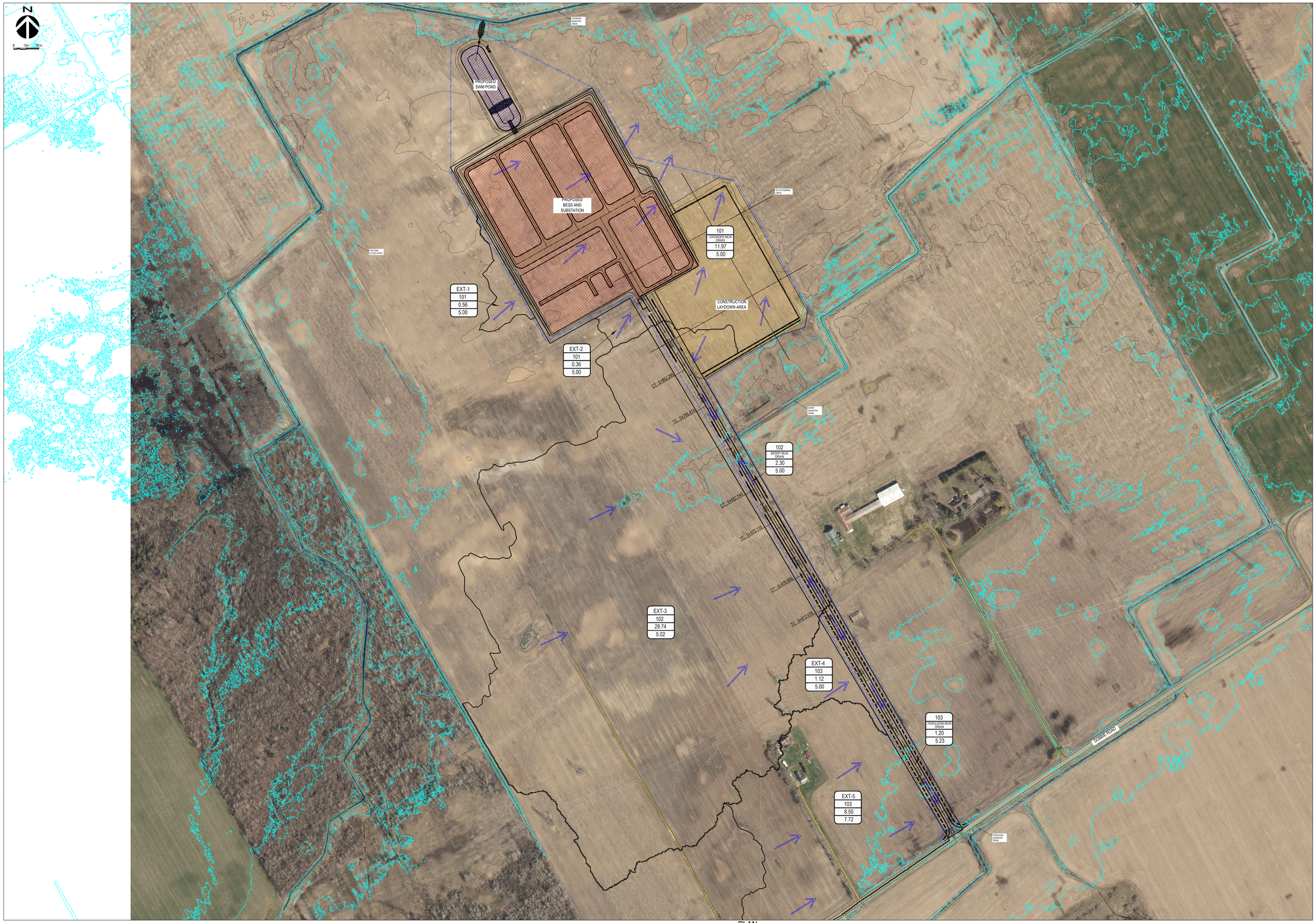

PLAN
SCALE: 1:2000

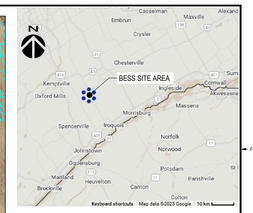

KEY PLAN
SCALE: NTS

LEGEND	
SYMBOL	DESCRIPTION
	EXISTING CONTOUR LINES
	EXISTING PROPERTY LINES
	EXISTING FENCE
	EXISTING U/G TELEPHONE
	EXISTING U/G GAS LINE
	EXISTING WATER WELL
	EXISTING LIGHT POLE
	EXISTING TREE
	NATURAL DRAINAGE BOUNDARY
	PROPERTY LINE SETBACK
	LIMIT OF DISTURBANCE
	PROPOSED ROAD
	SILT FENCE
	RUNOFF FLOW DIRECTION
	EXISTING DITCH

EXT-5	- CATCHMENT ID
J10	- OUTLET OF THE SUBCATCHMENT
12.58	- DRAINAGE AREA (ha)
5.05	- % IMPERVIOUS

IN PROGRESS

THIS DOCUMENT MUST NOT BE USED FOR CONSTRUCTION (OR FABRICATION OR INSTALLATION)

REFERENCE DRAWING:		REFERENCE DRAWING:	
C-4105	DRAINAGE LAYOUT AND DETAILS		
REF #	TITLE	REF #	TITLE

ISSUED FOR - REVISION:				ISSUED FOR - REVISION:			
0B	2025-05-27	RE-ISSUED FOR ECA DESIGN SUBMISSION	M.E.				
0A	2025-03-05	ISSUED FOR ECA DESIGN SUBMISSION	M.E.				
RV.	DATE	DESCRIPTION	BY	RV.	DATE	DESCRIPTION	BY

SEAL:

DISCLAIMER: COPYRIGHT
THIS DRAWING AND DESIGN IS COPYRIGHT PROTECTED WHICH SHALL NOT BE USED, REPRODUCED OR REVISED WITHOUT WRITTEN PERMISSION BY WSP CANADA INC. THE CONTRACTOR SHALL CHECK AND VERIFY ALL DIMENSIONS AND UTILITY LOCATIONS AND REPORT ALL ERRORS AND OMISSIONS TO WSP CANADA INC. PRIOR TO ACTION.
THIS DRAWING IS NOT TO BE SCALED.

ORIGINAL SCALE: 1:2000
PREPARED BY: J. DORRINGTON
ASSISTED BY: M. EDWARDS
EDITED BY: --
ASSISTED BY: --
DRAWN BY: F. SANGALANG
DISCIPLINE: CIVIL
DATE: 2025-03-05
IF THIS BAR IS NOT 25 mm LONG, ADJUST YOUR PLOTTING SCALE
25mm

455 18th STREET SE, MAIN FLOOR
CALGARY, ALBERTA, CANADA T2E 6J5
TEL.: 403-248-9463 | WWW.WSP.COM

PROJECT #: CA0047941.1010

CLIENT: Potentia
CLIENT REF. #: --

TITLE:
BESS
PRE-DEVELOPMENT DRAINAGE PLAN

PROJECT:
SKYVIEW
390 MW BESS PROJECT

DRAWING #: C-4106
RV.: 0B

CTB: ---
PRINTED ON: May 27, 2025 11:21:11 AM FILE NAME: 650 AI - W:\CA0047941.1010_SKYVIEW_BESS\CA0047941.1010_SKYVIEW_BESS\CADD\PDM\C-4106.dwg
ORIGINAL SIZE: 841 x 594 mm
COPYRIGHT: THE ORIGINAL OF THE TECHNOLOGY AND DOCUMENT BEIN HERSWITH AS BEEN AUTHORIZED AND WILL BE RETAINED BY WSP FOR A MINIMUM OF TEN YEARS. THE DOCUMENT MAY BE USED BY THE OWNER FOR THE PURPOSE AGREED TO BY WSP AND THE OWNER. ANY OTHER USE OR REPRODUCTION WITHOUT WSP'S WRITTEN CONSENT IS PROHIBITED.
DISCLAIMER: THE FILE TRANSMITTED IS BELIEVED TO BE FREE OF ANY VIRUSES. WSP ACCEPTS NO RESPONSIBILITY FOR ANY DAMAGE WHICH MAY BE CAUSED TO YOUR SYSTEM BY RECEIVING THIS FILE.

APPENDIX

C

Existing Conditions PCSWMM Analysis

APPENDIX

C-1 PCSWMM Schematics

Legend
Outfall
Subcatchment
Watercourse
Existing PCSWMM Model Schematics
CrowdeMunDrain
BerryMunDrain
FergusonMunDrain
101
102
103
EXT-1
EXT-2
EXT-3
EXT-4
EXT-5
Hulbert Rd
Branch Rd
Dobbie Rd
N
350 m

APPENDIX

C-2 PCSWMM Outputs

2 yr - SCS Type II 24 hr storm

```
  EPA STORM WATER MANAGEMENT MODEL - VERSION 5.2 (Build 5.2.4)
  ------------------------------------------------------------


  *************
  Element Count
  *************
  Number of rain gages ...... 7
  Number of subcatchments ... 8
  Number of nodes ........... 3
  Number of links ........... 0
  Number of pollutants ...... 0
  Number of land uses ....... 0


  ****************
  Raingage Summary
  ****************
                                                        Data       Recording
  Name                 Data Source                      Type       Interval
  ---------------------------------------------------------------------------
  100yr_SCS_Type_II_12hr 100yr_SCS_Type_II_12hr         INTENSITY    6 min.
  100yr_SCS_Type_II_24hr 100yr_SCS_Type_II_24hr         INTENSITY    6 min.
  10yr_SCS_Type_II_24hr 10yr_SCS_Type_II_24hr          INTENSITY    6 min.
  25yr_SCS_Type_II_24hr 25yr_SCS_Type_II_24hr          INTENSITY    6 min.
  2yr_SCS_Type_II_24hr 2yr_SCS_Type_II_24hr           INTENSITY    6 min.
  50yr_SCS_Type_II_24hr 50yr_SCS_Type_II_24hr          INTENSITY    6 min.
  5yr_SCS_Type_II_24hr 5yr_SCS_Type_II_24hr           INTENSITY    6 min.


  ********************
  Subcatchment Summary
  ********************
  Name                       Area     Width   %Imperv    %Slope Rain Gage
Outlet
  ------------------------------------------------------------------------------------
--------------------------
  101                       11.97    334.59      5.00    0.4000
2yr_SCS_Type_II_24hr CrowderMunDrain
  102                        2.29     77.61      5.00    0.7800
2yr_SCS_Type_II_24hr BerryMunDrain
  103                        1.20     29.88      5.23    0.4450
2yr_SCS_Type_II_24hr FergusonMunDrain
  EXT-1                      0.56     70.48      5.00    0.8000
2yr_SCS_Type_II_24hr 101
  EXT-2                      0.36     56.76      5.00    1.2260
2yr_SCS_Type_II_24hr 101
  EXT-3                     29.74    482.19      5.02    0.1970
2yr_SCS_Type_II_24hr 102
  EXT-4                      1.12    101.24      5.00    0.4470
2yr_SCS_Type_II_24hr 103
  EXT-5                      8.50    263.73      7.72    0.6420
2yr_SCS_Type_II_24hr 103


  ************
  Node Summary
```

```
************
                                          Invert      Max.    Ponded    External
Name                 Type                  Elev.     Depth      Area    Inflow
--------------------------------------------------------------------------------
BerryMunDrain        OUTFALL               82.55      0.00       0.0
CrowderMunDrain      OUTFALL                0.00      0.00       0.0
FergusonMunDrain     OUTFALL               82.71      0.00       0.0


****************
Analysis Options
****************
Flow Units ............... CMS
Process Models:
  Rainfall/Runoff ........ YES
  RDII ................... NO
  Snowmelt ............... NO
  Groundwater ............ NO
  Flow Routing ........... NO
  Water Quality .......... NO
Infiltration Method ...... CURVE_NUMBER
Surcharge Method ......... EXTRAN
Starting Date ............ 01/27/2025 00:00:00
Ending Date .............. 01/29/2025 00:00:00
Antecedent Dry Days ...... 0.0
Report Time Step ......... 00:01:00
Wet Time Step ............ 00:05:00
Dry Time Step ............ 00:05:00


**************************        Volume         Depth
Runoff Quantity Continuity     hectare-m            mm
**************************     ---------       -------
Total Precipitation ......         3.077        55.200
Evaporation Loss .........         0.000         0.000
Infiltration Loss ........         1.923        34.498
Surface Runoff ...........         0.879        15.773
Final Storage ............         0.275         4.941
Continuity Error (%) .....        -0.021


**************************        Volume        Volume
Flow Routing Continuity        hectare-m      10^6 ltr
**************************     ---------     ---------
Dry Weather Inflow .......         0.000         0.000
Wet Weather Inflow .......         0.879         8.793
Groundwater Inflow .......         0.000         0.000
RDII Inflow ..............         0.000         0.000
External Inflow ..........         0.000         0.000
External Outflow .........         0.879         8.793
Flooding Loss ............         0.000         0.000
Evaporation Loss .........         0.000         0.000
Exfiltration Loss ........         0.000         0.000
Initial Stored Volume ....         0.000         0.000
Final Stored Volume ......         0.000         0.000
Continuity Error (%) .....         0.000
```

```
  ***************************
  Subcatchment Runoff Summary
  ***************************

  ---------------------------------------------------------------------------------
---------------------------------------------
                            Total      Total      Total      Total     Imperv
Perv      Total       Total     Peak  Runoff
                           Precip      Runon       Evap      Infil     Runoff
Runoff     Runoff      Runoff   Runoff   Coeff
  Subcatchment                 mm         mm         mm         mm         mm
mm         mm    10^6 ltr      CMS
  ---------------------------------------------------------------------------------
---------------------------------------------
  101                       55.20       1.33       0.00      37.40       2.76
13.37      16.12        1.93     0.13   0.285
  102                       55.20     209.11       0.00      33.59      13.13
208.37     221.51        5.08     0.09   0.838
  103                       55.20     136.10       0.00      36.64       9.93
138.75     148.68        1.78     0.04   0.777
  EXT-1                     55.20       0.00       0.00      36.71       2.68
14.52      17.21        0.10     0.01   0.312
  EXT-2                     55.20       0.00       0.00      36.46       2.68
14.78      17.47        0.06     0.01   0.316
  EXT-3                     55.20       0.00       0.00      32.70       2.70
13.43      16.13        4.80     0.31   0.292
  EXT-4                     55.20       0.00       0.00      37.26       2.68
13.97      16.66        0.19     0.01   0.302
  EXT-5                     55.20       0.00       0.00      36.07       4.18
12.78      16.95        1.44     0.14   0.307


  Analysis begun on:  Fri Feb 21 12:26:40 2025
  Analysis ended on:  Fri Feb 21 12:26:40 2025
  Total elapsed time: < 1 sec
```

5 yr - SCS Type II 24 hr storm

```
EPA STORM WATER MANAGEMENT MODEL - VERSION 5.2 (Build 5.2.4)
------------------------------------------------------------


*************
Element Count
*************
Number of rain gages ...... 7
Number of subcatchments ... 8
Number of nodes ........... 3
Number of links ........... 0
Number of pollutants ...... 0
Number of land uses ....... 0


****************
Raingage Summary
****************
                                                        Data       Recording
Name                  Data Source                       Type       Interval
--------------------------------------------------------------------------
100yr_SCS_Type_II_12hr 100yr_SCS_Type_II_12hr          INTENSITY    6 min.
100yr_SCS_Type_II_24hr 100yr_SCS_Type_II_24hr          INTENSITY    6 min.
10yr_SCS_Type_II_24hr 10yr_SCS_Type_II_24hr           INTENSITY    6 min.
25yr_SCS_Type_II_24hr 25yr_SCS_Type_II_24hr           INTENSITY    6 min.
2yr_SCS_Type_II_24hr 2yr_SCS_Type_II_24hr            INTENSITY    6 min.
50yr_SCS_Type_II_24hr 50yr_SCS_Type_II_24hr           INTENSITY    6 min.
5yr_SCS_Type_II_24hr 5yr_SCS_Type_II_24hr            INTENSITY    6 min.


********************
Subcatchment Summary
********************
Name                        Area     Width   %Imperv    %Slope Rain Gage
Outlet
-------------------------------------------------------------------------------------
--------------------------
101                        11.97    334.59      5.00    0.4000
5yr_SCS_Type_II_24hr CrowderMunDrain
102                         2.29     77.61      5.00    0.7800
5yr_SCS_Type_II_24hr BerryMunDrain
103                         1.20     29.88      5.23    0.4450
5yr_SCS_Type_II_24hr FergusonMunDrain
EXT-1                       0.56     70.48      5.00    0.8000
5yr_SCS_Type_II_24hr 101
EXT-2                       0.36     56.76      5.00    1.2260
5yr_SCS_Type_II_24hr 101
EXT-3                      29.74    482.19      5.02    0.1970
5yr_SCS_Type_II_24hr 102
EXT-4                       1.12    101.24      5.00    0.4470
5yr_SCS_Type_II_24hr 103
EXT-5                       8.50    263.73      7.72    0.6420
5yr_SCS_Type_II_24hr 103


************
Node Summary
```

```
************
                                          Invert      Max.    Ponded    External
Name                 Type                  Elev.     Depth      Area    Inflow
--------------------------------------------------------------------------------
BerryMunDrain        OUTFALL               82.55      0.00       0.0
CrowderMunDrain      OUTFALL                0.00      0.00       0.0
FergusonMunDrain     OUTFALL               82.71      0.00       0.0


****************
Analysis Options
****************
Flow Units ............... CMS
Process Models:
  Rainfall/Runoff ........ YES
  RDII ................... NO
  Snowmelt ............... NO
  Groundwater ............ NO
  Flow Routing ........... NO
  Water Quality .......... NO
Infiltration Method ...... CURVE_NUMBER
Surcharge Method ......... EXTRAN
Starting Date ............ 01/27/2025 00:00:00
Ending Date .............. 01/29/2025 00:00:00
Antecedent Dry Days ...... 0.0
Report Time Step ......... 00:01:00
Wet Time Step ............ 00:05:00
Dry Time Step ............ 00:05:00


**************************        Volume         Depth
Runoff Quantity Continuity     hectare-m            mm
**************************     ---------       -------
Total Precipitation ......         4.013        72.000
Evaporation Loss .........         0.000         0.000
Infiltration Loss ........         2.188        39.262
Surface Runoff ...........         1.517        27.223
Final Storage ............         0.308         5.532
Continuity Error (%) .....        -0.023


**************************        Volume        Volume
Flow Routing Continuity        hectare-m      10^6 ltr
**************************     ---------     ---------
Dry Weather Inflow .......         0.000         0.000
Wet Weather Inflow .......         1.518        15.176
Groundwater Inflow .......         0.000         0.000
RDII Inflow ..............         0.000         0.000
External Inflow ..........         0.000         0.000
External Outflow .........         1.518        15.176
Flooding Loss ............         0.000         0.000
Evaporation Loss .........         0.000         0.000
Exfiltration Loss ........         0.000         0.000
Initial Stored Volume ....         0.000         0.000
Final Stored Volume ......         0.000         0.000
Continuity Error (%) .....         0.000
```

```
  ***************************
  Subcatchment Runoff Summary
  ***************************

  ---------------------------------------------------------------------------------
---------------------------------------------
                            Total      Total      Total      Total     Imperv
Perv      Total       Total     Peak  Runoff
                           Precip      Runon       Evap      Infil     Runoff
Runoff     Runoff      Runoff   Runoff   Coeff
  Subcatchment                 mm         mm         mm         mm         mm
mm         mm    10^6 ltr      CMS
  ---------------------------------------------------------------------------------
---------------------------------------------
  101                       72.00       2.19       0.00      43.01       3.64
24.31      27.95        3.34     0.19   0.377
  102                       72.00     361.65       0.00      38.03      21.60
363.13     384.73        8.83     0.16   0.887
  103                       72.00     227.02       0.00      42.03      15.56
235.17     250.74        3.00     0.08   0.839
  EXT-1                     72.00       0.00       0.00      42.31       3.52
24.89      28.41        0.16     0.02   0.395
  EXT-2                     72.00       0.00       0.00      42.03       3.52
25.18      28.71        0.10     0.02   0.399
  EXT-3                     72.00       0.00       0.00      36.89       3.55
24.35      27.89        8.30     0.43   0.387
  EXT-4                     72.00       0.00       0.00      42.93       3.52
24.28      27.81        0.31     0.03   0.386
  EXT-5                     72.00       0.00       0.00      41.43       5.47
22.80      28.27        2.40     0.21   0.393


  Analysis begun on:  Fri Feb 21 12:31:35 2025
  Analysis ended on:  Fri Feb 21 12:31:36 2025
  Total elapsed time: 00:00:01
```

10 yr - SCS Type II 24 hr storm

```
EPA STORM WATER MANAGEMENT MODEL - VERSION 5.2 (Build 5.2.4)
------------------------------------------------------------


*************
Element Count
*************
Number of rain gages ...... 7
Number of subcatchments ... 8
Number of nodes ........... 3
Number of links ........... 0
Number of pollutants ...... 0
Number of land uses ....... 0


****************
Raingage Summary
****************
                                                        Data       Recording
Name                  Data Source                       Type       Interval
-------------------------------------------------------------------------
100yr_SCS_Type_II_12hr 100yr_SCS_Type_II_12hr          INTENSITY    6 min.
100yr_SCS_Type_II_24hr 100yr_SCS_Type_II_24hr          INTENSITY    6 min.
10yr_SCS_Type_II_24hr 10yr_SCS_Type_II_24hr           INTENSITY    6 min.
25yr_SCS_Type_II_24hr 25yr_SCS_Type_II_24hr           INTENSITY    6 min.
2yr_SCS_Type_II_24hr 2yr_SCS_Type_II_24hr            INTENSITY    6 min.
50yr_SCS_Type_II_24hr 50yr_SCS_Type_II_24hr           INTENSITY    6 min.
5yr_SCS_Type_II_24hr 5yr_SCS_Type_II_24hr            INTENSITY    6 min.


********************
Subcatchment Summary
********************
Name                        Area     Width   %Imperv    %Slope Rain Gage
Outlet
-------------------------------------------------------------------------------------
--------------------------
101                        11.97    334.59      5.00    0.4000
10yr_SCS_Type_II_24hr CrowderMunDrain
102                         2.29     77.61      5.00    0.7800
10yr_SCS_Type_II_24hr BerryMunDrain
103                         1.20     29.88      5.23    0.4450
10yr_SCS_Type_II_24hr FergusonMunDrain
EXT-1                       0.56     70.48      5.00    0.8000
10yr_SCS_Type_II_24hr 101
EXT-2                       0.36     56.76      5.00    1.2260
10yr_SCS_Type_II_24hr 101
EXT-3                      29.74    482.19      5.02    0.1970
10yr_SCS_Type_II_24hr 102
EXT-4                       1.12    101.24      5.00    0.4470
10yr_SCS_Type_II_24hr 103
EXT-5                       8.50    263.73      7.72    0.6420
10yr_SCS_Type_II_24hr 103


************
Node Summary
```

```
************
                                          Invert      Max.    Ponded    External
Name                 Type                  Elev.     Depth      Area    Inflow
--------------------------------------------------------------------------------
BerryMunDrain        OUTFALL               82.55      0.00       0.0
CrowderMunDrain      OUTFALL                0.00      0.00       0.0
FergusonMunDrain     OUTFALL               82.71      0.00       0.0


****************
Analysis Options
****************
Flow Units ............... CMS
Process Models:
  Rainfall/Runoff ........ YES
  RDII ................... NO
  Snowmelt ............... NO
  Groundwater ............ NO
  Flow Routing ........... NO
  Water Quality .......... NO
Infiltration Method ...... CURVE_NUMBER
Surcharge Method ......... EXTRAN
Starting Date ............ 01/27/2025 00:00:00
Ending Date .............. 01/29/2025 00:00:00
Antecedent Dry Days ...... 0.0
Report Time Step ......... 00:01:00
Wet Time Step ............ 00:05:00
Dry Time Step ............ 00:05:00


**************************        Volume         Depth
Runoff Quantity Continuity     hectare-m            mm
**************************     ---------       -------
Total Precipitation ......         4.682        84.000
Evaporation Loss .........         0.000         0.000
Infiltration Loss ........         2.340        41.980
Surface Runoff ...........         2.016        36.175
Final Storage ............         0.327         5.865
Continuity Error (%) .....        -0.023


**************************        Volume        Volume
Flow Routing Continuity        hectare-m      10^6 ltr
**************************     ---------     ---------
Dry Weather Inflow .......         0.000         0.000
Wet Weather Inflow .......         2.017        20.166
Groundwater Inflow .......         0.000         0.000
RDII Inflow ..............         0.000         0.000
External Inflow ..........         0.000         0.000
External Outflow .........         2.017        20.166
Flooding Loss ............         0.000         0.000
Evaporation Loss .........         0.000         0.000
Exfiltration Loss ........         0.000         0.000
Initial Stored Volume ....         0.000         0.000
Final Stored Volume ......         0.000         0.000
Continuity Error (%) .....         0.000
```

```
  ***************************
  Subcatchment Runoff Summary
  ***************************

  ---------------------------------------------------------------------------------
---------------------------------------------
                            Total      Total      Total      Total     Imperv
Perv      Total       Total     Peak  Runoff
                           Precip      Runon       Evap      Infil     Runoff
Runoff     Runoff      Runoff   Runoff   Coeff
  Subcatchment                 mm         mm         mm         mm         mm
mm         mm    10^6 ltr      CMS
  ---------------------------------------------------------------------------------
---------------------------------------------
  101                        84.00       2.86       0.00      46.25       4.28
32.94      37.21        4.45     0.25   0.428
  102                        84.00     480.83       0.00      40.54      28.16
484.33     512.48       11.76     0.23   0.907
  103                        84.00     297.62       0.00      45.13      19.88
310.17     330.05        3.95     0.12   0.865
  EXT-1                      84.00       0.00       0.00      45.63       4.12
32.97      37.09        0.21     0.03   0.442
  EXT-2                      84.00       0.00       0.00      45.34       4.12
33.28      37.40        0.14     0.02   0.445
  EXT-3                      84.00       0.00       0.00      39.24       4.15
32.94      37.09       11.03     0.54   0.442
  EXT-4                      84.00       0.00       0.00      46.27       4.12
32.33      36.46        0.41     0.04   0.434
  EXT-5                      84.00       0.00       0.00      44.54       6.40
30.66      37.07        3.15     0.26   0.441


  Analysis begun on:  Fri Feb 21 12:33:02 2025
  Analysis ended on:  Fri Feb 21 12:33:02 2025
  Total elapsed time: < 1 sec
```

25 yr - SCS Type II 24 hr storm

```
EPA STORM WATER MANAGEMENT MODEL - VERSION 5.2 (Build 5.2.4)
------------------------------------------------------------


*************
Element Count
*************
Number of rain gages ...... 7
Number of subcatchments ... 8
Number of nodes ........... 3
Number of links ........... 0
Number of pollutants ...... 0
Number of land uses ....... 0


****************
Raingage Summary
****************
                                                        Data       Recording
Name                  Data Source                       Type       Interval
-------------------------------------------------------------------------
100yr_SCS_Type_II_12hr 100yr_SCS_Type_II_12hr          INTENSITY    6 min.
100yr_SCS_Type_II_24hr 100yr_SCS_Type_II_24hr          INTENSITY    6 min.
10yr_SCS_Type_II_24hr 10yr_SCS_Type_II_24hr           INTENSITY    6 min.
25yr_SCS_Type_II_24hr 25yr_SCS_Type_II_24hr           INTENSITY    6 min.
2yr_SCS_Type_II_24hr 2yr_SCS_Type_II_24hr            INTENSITY    6 min.
50yr_SCS_Type_II_24hr 50yr_SCS_Type_II_24hr           INTENSITY    6 min.
5yr_SCS_Type_II_24hr 5yr_SCS_Type_II_24hr            INTENSITY    6 min.


********************
Subcatchment Summary
********************
Name                        Area     Width   %Imperv    %Slope Rain Gage
Outlet
-------------------------------------------------------------------------------------
--------------------------
101                        11.97    334.59      5.00    0.4000
25yr_SCS_Type_II_24hr CrowderMunDrain
102                         2.29     77.61      5.00    0.7800
25yr_SCS_Type_II_24hr BerryMunDrain
103                         1.20     29.88      5.23    0.4450
25yr_SCS_Type_II_24hr FergusonMunDrain
EXT-1                       0.56     70.48      5.00    0.8000
25yr_SCS_Type_II_24hr 101
EXT-2                       0.36     56.76      5.00    1.2260
25yr_SCS_Type_II_24hr 101
EXT-3                      29.74    482.19      5.02    0.1970
25yr_SCS_Type_II_24hr 102
EXT-4                       1.12    101.24      5.00    0.4470
25yr_SCS_Type_II_24hr 103
EXT-5                       8.50    263.73      7.72    0.6420
25yr_SCS_Type_II_24hr 103


************
Node Summary
```

```
************
                                          Invert      Max.    Ponded    External
Name                 Type                  Elev.     Depth      Area    Inflow
--------------------------------------------------------------------------------
BerryMunDrain        OUTFALL               82.55      0.00       0.0
CrowderMunDrain      OUTFALL                0.00      0.00       0.0
FergusonMunDrain     OUTFALL               82.71      0.00       0.0


****************
Analysis Options
****************
Flow Units ............... CMS
Process Models:
  Rainfall/Runoff ........ YES
  RDII ................... NO
  Snowmelt ............... NO
  Groundwater ............ NO
  Flow Routing ........... NO
  Water Quality .......... NO
Infiltration Method ...... CURVE_NUMBER
Surcharge Method ......... EXTRAN
Starting Date ............ 01/27/2025 00:00:00
Ending Date .............. 01/29/2025 00:00:00
Antecedent Dry Days ...... 0.0
Report Time Step ......... 00:01:00
Wet Time Step ............ 00:05:00
Dry Time Step ............ 00:05:00


**************************        Volume         Depth
Runoff Quantity Continuity     hectare-m            mm
**************************     ---------       -------
Total Precipitation ......         5.484        98.400
Evaporation Loss .........         0.000         0.000
Infiltration Loss ........         2.491        44.693
Surface Runoff ...........         2.649        47.526
Final Storage ............         0.346         6.204
Continuity Error (%) .....        -0.024


**************************        Volume        Volume
Flow Routing Continuity        hectare-m      10^6 ltr
**************************     ---------     ---------
Dry Weather Inflow .......         0.000         0.000
Wet Weather Inflow .......         2.649        26.494
Groundwater Inflow .......         0.000         0.000
RDII Inflow ..............         0.000         0.000
External Inflow ..........         0.000         0.000
External Outflow .........         2.649        26.494
Flooding Loss ............         0.000         0.000
Evaporation Loss .........         0.000         0.000
Exfiltration Loss ........         0.000         0.000
Initial Stored Volume ....         0.000         0.000
Final Stored Volume ......         0.000         0.000
Continuity Error (%) .....         0.000
```

```
  ***************************
  Subcatchment Runoff Summary
  ***************************

  ---------------------------------------------------------------------------------
---------------------------------------------
                            Total      Total      Total      Total     Imperv
Perv      Total       Total     Peak  Runoff
                           Precip      Runon       Evap      Infil     Runoff
Runoff     Runoff      Runoff   Runoff   Coeff
  Subcatchment                 mm         mm         mm         mm         mm
mm         mm    10^6 ltr      CMS
  ---------------------------------------------------------------------------------
---------------------------------------------
  101                        98.40       3.70       0.00      49.53       5.04
43.96      49.00        5.86     0.32   0.480
  102                        98.40     631.68       0.00      43.03      36.42
637.93     674.35       15.48     0.33   0.924
  103                        98.40     387.00       0.00      48.25      25.31
405.20     430.51        5.15     0.18   0.887
  EXT-1                      98.40       0.00       0.00      49.05       4.84
43.24      48.08        0.27     0.04   0.489
  EXT-2                      98.40       0.00       0.00      48.74       4.84
43.56      48.40        0.18     0.03   0.492
  EXT-3                      98.40       0.00       0.00      41.57       4.88
43.85      48.72       14.49     0.67   0.495
  EXT-4                      98.40       0.00       0.00      49.71       4.84
42.58      47.42        0.53     0.06   0.482
  EXT-5                      98.40       0.00       0.00      47.66       7.52
40.68      48.20        4.10     0.34   0.490


  Analysis begun on:  Fri Feb 21 12:37:31 2025
  Analysis ended on:  Fri Feb 21 12:37:32 2025
  Total elapsed time: 00:00:01
```

50 yr - SCS Type II 24 hr storm

```
EPA STORM WATER MANAGEMENT MODEL - VERSION 5.2 (Build 5.2.4)
------------------------------------------------------------


*************
Element Count
*************
Number of rain gages ...... 7
Number of subcatchments ... 8
Number of nodes ........... 3
Number of links ........... 0
Number of pollutants ...... 0
Number of land uses ....... 0


****************
Raingage Summary
****************
                                                        Data       Recording
Name                  Data Source                       Type       Interval
-------------------------------------------------------------------------
100yr_SCS_Type_II_12hr 100yr_SCS_Type_II_12hr          INTENSITY    6 min.
100yr_SCS_Type_II_24hr 100yr_SCS_Type_II_24hr          INTENSITY    6 min.
10yr_SCS_Type_II_24hr 10yr_SCS_Type_II_24hr           INTENSITY    6 min.
25yr_SCS_Type_II_24hr 25yr_SCS_Type_II_24hr           INTENSITY    6 min.
2yr_SCS_Type_II_24hr 2yr_SCS_Type_II_24hr            INTENSITY    6 min.
50yr_SCS_Type_II_24hr 50yr_SCS_Type_II_24hr           INTENSITY    6 min.
5yr_SCS_Type_II_24hr 5yr_SCS_Type_II_24hr            INTENSITY    6 min.


********************
Subcatchment Summary
********************
Name                        Area     Width   %Imperv    %Slope Rain Gage
Outlet
-------------------------------------------------------------------------------------
--------------------------
101                        11.97    334.59      5.00    0.4000
50yr_SCS_Type_II_24hr CrowderMunDrain
102                         2.29     77.61      5.00    0.7800
50yr_SCS_Type_II_24hr BerryMunDrain
103                         1.20     29.88      5.23    0.4450
50yr_SCS_Type_II_24hr FergusonMunDrain
EXT-1                       0.56     70.48      5.00    0.8000
50yr_SCS_Type_II_24hr 101
EXT-2                       0.36     56.76      5.00    1.2260
50yr_SCS_Type_II_24hr 101
EXT-3                      29.74    482.19      5.02    0.1970
50yr_SCS_Type_II_24hr 102
EXT-4                       1.12    101.24      5.00    0.4470
50yr_SCS_Type_II_24hr 103
EXT-5                       8.50    263.73      7.72    0.6420
50yr_SCS_Type_II_24hr 103


************
Node Summary
```

```
************
                                          Invert      Max.    Ponded    External
Name                 Type                  Elev.     Depth      Area    Inflow
--------------------------------------------------------------------------------
BerryMunDrain        OUTFALL               82.55      0.00       0.0
CrowderMunDrain      OUTFALL                0.00      0.00       0.0
FergusonMunDrain     OUTFALL               82.71      0.00       0.0


****************
Analysis Options
****************
Flow Units ............... CMS
Process Models:
  Rainfall/Runoff ........ YES
  RDII ................... NO
  Snowmelt ............... NO
  Groundwater ............ NO
  Flow Routing ........... NO
  Water Quality .......... NO
Infiltration Method ...... CURVE_NUMBER
Surcharge Method ......... EXTRAN
Starting Date ............ 01/27/2025 00:00:00
Ending Date .............. 01/29/2025 00:00:00
Antecedent Dry Days ...... 0.0
Report Time Step ......... 00:01:00
Wet Time Step ............ 00:05:00
Dry Time Step ............ 00:05:00


**************************        Volume         Depth
Runoff Quantity Continuity     hectare-m            mm
**************************     ---------       -------
Total Precipitation ......         6.020       108.000
Evaporation Loss .........         0.000         0.000
Infiltration Loss ........         2.577        46.242
Surface Runoff ...........         3.087        55.382
Final Storage ............         0.357         6.403
Continuity Error (%) .....        -0.025


**************************        Volume        Volume
Flow Routing Continuity        hectare-m      10^6 ltr
**************************     ---------     ---------
Dry Weather Inflow .......         0.000         0.000
Wet Weather Inflow .......         3.087        30.874
Groundwater Inflow .......         0.000         0.000
RDII Inflow ..............         0.000         0.000
External Inflow ..........         0.000         0.000
External Outflow .........         3.087        30.874
Flooding Loss ............         0.000         0.000
Evaporation Loss .........         0.000         0.000
Exfiltration Loss ........         0.000         0.000
Initial Stored Volume ....         0.000         0.000
Final Stored Volume ......         0.000         0.000
Continuity Error (%) .....         0.000
```

```
  ***************************
  Subcatchment Runoff Summary
  ***************************

  ---------------------------------------------------------------------------------
---------------------------------------------
                            Total      Total      Total      Total     Imperv
Perv      Total       Total     Peak  Runoff
                           Precip      Runon       Evap      Infil     Runoff
Runoff     Runoff      Runoff   Runoff   Coeff
  Subcatchment                 mm         mm         mm         mm         mm
mm         mm    10^6 ltr      CMS
  ---------------------------------------------------------------------------------
---------------------------------------------
  101                       108.00       4.29       0.00      51.42       5.55
51.63      57.18        6.84     0.38   0.509
  102                       108.00     735.88       0.00      44.44      42.11
744.12     786.23       18.04     0.41   0.932
  103                       108.00     448.86       0.00      50.04      29.05
471.01     500.06        5.98     0.22   0.898
  EXT-1                     108.00       0.00       0.00      51.06       5.32
50.36      55.69        0.31     0.05   0.516
  EXT-2                     108.00       0.00       0.00      50.73       5.32
50.69      56.01        0.20     0.04   0.519
  EXT-3                     108.00       0.00       0.00      42.88       5.36
51.40      56.76       16.88     0.77   0.526
  EXT-4                     108.00       0.00       0.00      51.72       5.32
49.69      55.01        0.61     0.07   0.509
  EXT-5                     108.00       0.00       0.00      49.46       8.26
47.64      55.90        4.75     0.39   0.518


  Analysis begun on:  Fri Feb 21 12:39:21 2025
  Analysis ended on:  Fri Feb 21 12:39:21 2025
  Total elapsed time: < 1 sec
```

100 yr - SCS Type II 24 hr storm

```
  EPA STORM WATER MANAGEMENT MODEL - VERSION 5.2 (Build 5.2.4)
  ------------------------------------------------------------


  *************
  Element Count
  *************
  Number of rain gages ...... 7
  Number of subcatchments ... 8
  Number of nodes ........... 3
  Number of links ........... 0
  Number of pollutants ...... 0
  Number of land uses ....... 0


  ****************
  Raingage Summary
  ****************
                                                        Data       Recording
  Name                  Data Source                     Type       Interval
  ---------------------------------------------------------------------------
  100yr_SCS_Type_II_12hr 100yr_SCS_Type_II_12hr         INTENSITY    6 min.
  100yr_SCS_Type_II_24hr 100yr_SCS_Type_II_24hr         INTENSITY    6 min.
  10yr_SCS_Type_II_24hr 10yr_SCS_Type_II_24hr          INTENSITY    6 min.
  25yr_SCS_Type_II_24hr 25yr_SCS_Type_II_24hr          INTENSITY    6 min.
  2yr_SCS_Type_II_24hr 2yr_SCS_Type_II_24hr           INTENSITY    6 min.
  50yr_SCS_Type_II_24hr 50yr_SCS_Type_II_24hr          INTENSITY    6 min.
  5yr_SCS_Type_II_24hr 5yr_SCS_Type_II_24hr           INTENSITY    6 min.


  *******************
  Subcatchment Summary
  *******************
  Name                        Area     Width   %Imperv    %Slope Rain Gage
Outlet
  ------------------------------------------------------------------------------------
--------------------------
  101                       11.97    334.59      5.00    0.4000
100yr_SCS_Type_II_24hr CrowderMunDrain
  102                        2.29     77.61      5.00    0.7800
100yr_SCS_Type_II_24hr BerryMunDrain
  103                        1.20     29.88      5.23    0.4450
100yr_SCS_Type_II_24hr FergusonMunDrain
  EXT-1                      0.56     70.48      5.00    0.8000
100yr_SCS_Type_II_24hr 101
  EXT-2                      0.36     56.76      5.00    1.2260
100yr_SCS_Type_II_24hr 101
  EXT-3                     29.74    482.19      5.02    0.1970
100yr_SCS_Type_II_24hr 102
  EXT-4                      1.12    101.24      5.00    0.4470
100yr_SCS_Type_II_24hr 103
  EXT-5                      8.50    263.73      7.72    0.6420
100yr_SCS_Type_II_24hr 103


  ************
  Node Summary
```

```
************
                                          Invert      Max.    Ponded    External
Name                 Type                  Elev.     Depth      Area    Inflow
--------------------------------------------------------------------------------
BerryMunDrain        OUTFALL               82.55      0.00       0.0
CrowderMunDrain      OUTFALL                0.00      0.00       0.0
FergusonMunDrain     OUTFALL               82.71      0.00       0.0


****************
Analysis Options
****************
Flow Units ............... CMS
Process Models:
  Rainfall/Runoff ........ YES
  RDII ................... NO
  Snowmelt ............... NO
  Groundwater ............ NO
  Flow Routing ........... NO
  Water Quality .......... NO
Infiltration Method ...... CURVE_NUMBER
Surcharge Method ......... EXTRAN
Starting Date ............ 01/27/2025 00:00:00
Ending Date .............. 01/29/2025 00:00:00
Antecedent Dry Days ...... 0.0
Report Time Step ......... 00:01:00
Wet Time Step ............ 00:05:00
Dry Time Step ............ 00:05:00


**************************        Volume         Depth
Runoff Quantity Continuity     hectare-m            mm
**************************     ---------       -------
Total Precipitation ......         6.555       117.600
Evaporation Loss .........         0.000         0.000
Infiltration Loss ........         2.654        47.621
Surface Runoff ...........         3.535        63.426
Final Storage ............         0.367         6.583
Continuity Error (%) .....        -0.026


**************************        Volume        Volume
Flow Routing Continuity        hectare-m      10^6 ltr
**************************     ---------     ---------
Dry Weather Inflow .......         0.000         0.000
Wet Weather Inflow .......         3.536        35.358
Groundwater Inflow .......         0.000         0.000
RDII Inflow ..............         0.000         0.000
External Inflow ..........         0.000         0.000
External Outflow .........         3.536        35.358
Flooding Loss ............         0.000         0.000
Evaporation Loss .........         0.000         0.000
Exfiltration Loss ........         0.000         0.000
Initial Stored Volume ....         0.000         0.000
Final Stored Volume ......         0.000         0.000
Continuity Error (%) .....         0.000
```

```
  ***************************
  Subcatchment Runoff Summary
  ***************************

  ---------------------------------------------------------------------------------
---------------------------------------------
                            Total      Total      Total      Total     Imperv
Perv      Total       Total     Peak  Runoff
                           Precip      Runon       Evap      Infil     Runoff
Runoff     Runoff      Runoff   Runoff   Coeff
  Subcatchment                 mm         mm         mm         mm         mm
mm         mm    10^6 ltr      CMS
  ---------------------------------------------------------------------------------
---------------------------------------------
  101                       117.60       4.89       0.00      53.10       6.06
59.52      65.58        7.85     0.46   0.535
  102                       117.60     842.39       0.00      45.69      47.91
852.73     900.64       20.67     0.49   0.938
  103                       117.60     512.24       0.00      51.64      32.86
538.45     571.32        6.83     0.27   0.907
  EXT-1                     117.60       0.00       0.00      52.85       5.80
57.68      63.48        0.35     0.06   0.540
  EXT-2                     117.60       0.00       0.00      52.53       5.80
58.01      63.82        0.23     0.05   0.543
  EXT-3                     117.60       0.00       0.00      44.04       5.84
59.13      64.98       19.33     0.87   0.553
  EXT-4                     117.60       0.00       0.00      53.54       5.80
56.99      62.80        0.70     0.09   0.534
  EXT-5                     117.60       0.00       0.00      51.06       9.00
54.79      63.79        5.42     0.46   0.542


  Analysis begun on:  Fri Feb 21 12:41:24 2025
  Analysis ended on:  Fri Feb 21 12:41:24 2025
  Total elapsed time: < 1 sec
```

APPENDIX

D

Proposed Conditions Drainage Mosaic

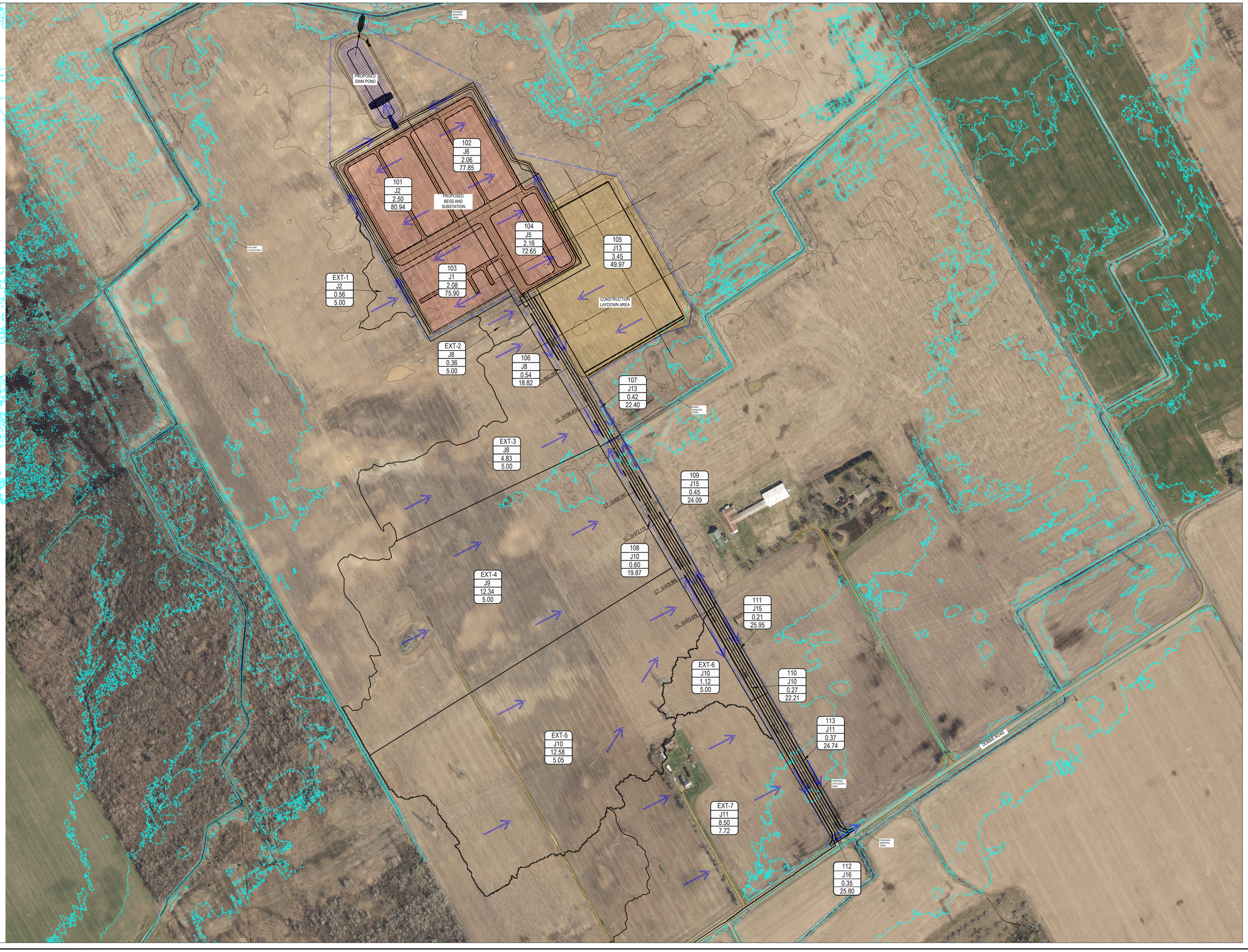

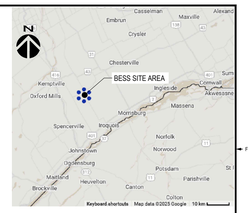

KEY PLAN

SCALE: NTS

LEGEND	
SYMBOL	DESCRIPTION
	EXISTING CONTOUR LINES
	EXISTING PROPERTY LINES
	EXISTING FENCE
	EXISTING U/G TELEPHONE
	EXISTING U/G GAS LINE
	EXISTING WATER WELL
	EXISTING LIGHT POLE
	EXISTING TREE
	SUB-CATCHMENT BOUNDARY
	PROPERTY LINE SETBACK
	LIMIT OF DISTURBANCE
	PROPOSED ROAD
	SILT FENCE
	RUNOFF FLOW DIRECTION
	EXISTING DITCH
	CSP CULVERT
	DITCH

EXT-5	- CATCHMENT ID
J10	- OUTLET OF THE SUBCATCHMENT
12.58	- DRAINAGE AREA (ha)
5.05	- % IMPERVIOUS

IN PROGRESS

THIS DOCUMENT MUST NOT BE USED FOR CONSTRUCTION (OR FABRICATION OR INSTALLATION)

REFERENCE DRAWING:

REF #	TITLE
C-4105	DRAINAGE LAYOUT AND DETAILS

REFERENCE DRAWING:

REF #	TITLE

ISSUED FOR - REVISION:

RV.	DATE	DESCRIPTION	BY
0B	2025-05-27	RE-ISSUED FOR ECA DESIGN SUBMISSION	M.E.
0A	2025-03-05	ISSUED FOR ECA DESIGN SUBMISSION	M.E.

ISSUED FOR - REVISION:

RV.	DATE	DESCRIPTION	BY

SEAL:

DISCLAIMER: COPYRIGHT
THIS DRAWING AND DESIGN IS COPYRIGHT PROTECTED (WHICH SHALL NOT BE USED, REPRODUCED OR REVISED WITHOUT WRITTEN PERMISSION BY WSP). THE CONTRACTOR SHALL CHECK AND VERIFY ALL DIMENSIONS AND UTILITY LOCATIONS AND REPORT ALL ERRORS AND OMISSIONS PRIOR TO BEGINNING WORK.
THIS DRAWING IS NOT TO BE SCALED.

ORIGINAL SCALE: 1:2000

PREPARED BY: J. DORRINGTON

ASSISTED BY: M. EDWARDS

EDITED BY: --

ASSISTED BY: --

DRAWN BY: F. SANGALANG

DISCIPLINE: CIVIL

DATE: 2025-03-05

IF THIS BAR IS NOT 25 mm LONG, ADJUST YOUR PLOTTING SCALE

25mm

405 18th STREET SE, MAIN FLOOR
CALGARY, ALBERTA, CANADA T2E 6J5
TEL: 403-248-9463 | WWW.WSP.COM

PROJECT #: CA0047941.1010

CLIENT: Potentia

CLIENT REF. #: --

TITLE: **BESS**

POST-DEVELOPMENT DRAINAGE PLAN

PROJECT: SKYVIEW 390 MW BESS PROJECT

DRAWING #: C-4107

RV.: 0B

CAUTION: THE ORIGINAL OF THIS TECHNICAL DOCUMENT EXISTS IN ELECTRONIC FORMAT. ANY ALTERATIONS TO THIS DOCUMENT MUST BE MADE TO THE ELECTRONIC FILE. ALTERATIONS MADE TO PRINTS OF THIS DOCUMENT ARE NOT AUTHORIZED.

FILE NAME: ISO A0, W:\CA0047941.1010_SKYVIEW_BESS\CD\02225_TR\LDR\MWD\CAD\DRAFT\A1.1010-SHB-C-4107.DWG

PLOTTED ON: May 27, 2025 2:11:11 PM

APPENDIX

E

Proposed Conditions PCSWMM Analysis

APPENDIX

E-1 PCSWMM Schematics

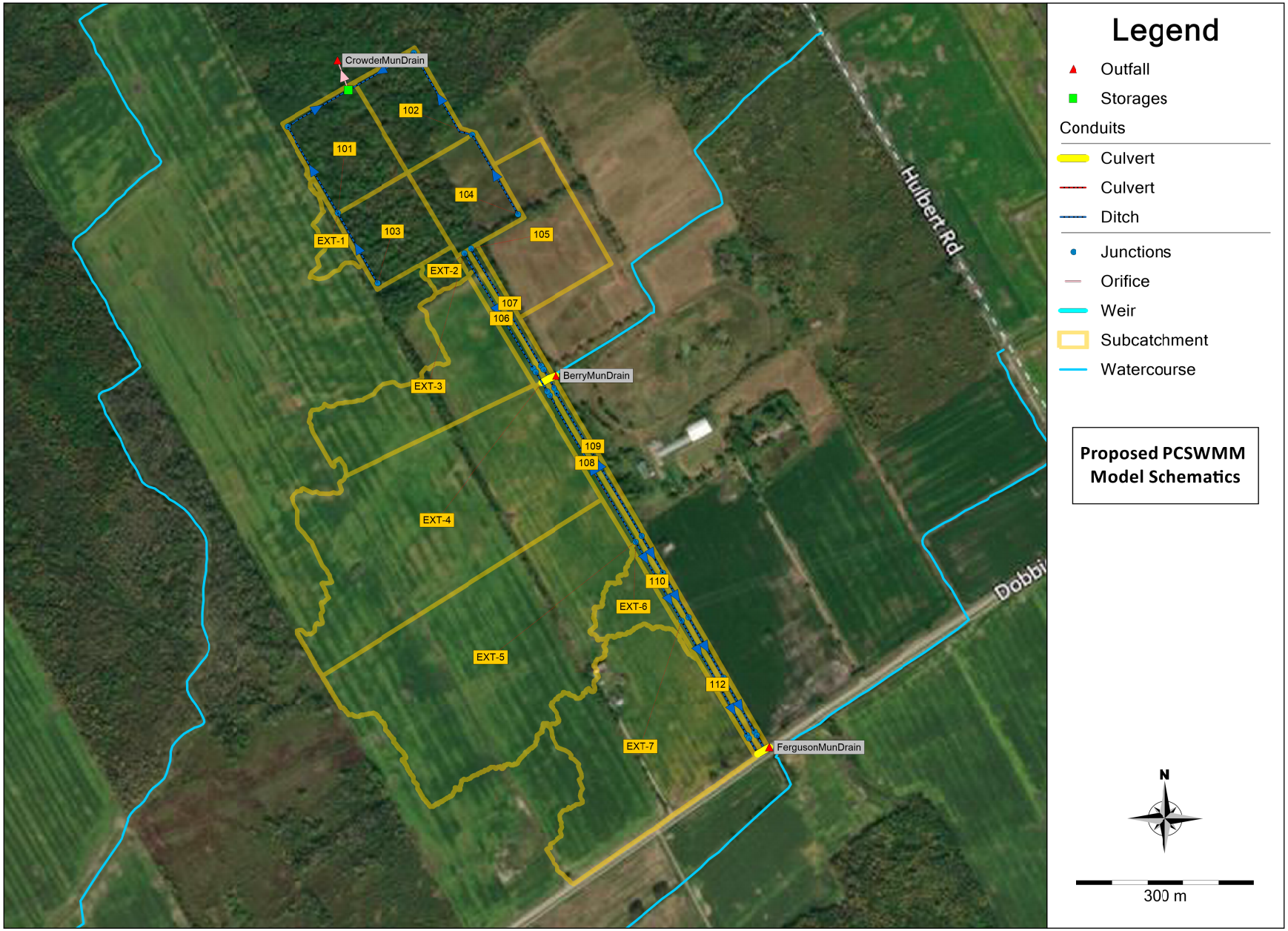
CrowderMunDrain
102
101
104
103
105
EXT-1
EXT-2
107
106
BerryMunDrain
EXT-3
109
108
EXT-4
110
EXT-6
EXT-5
112
EXT-7
FergusonMunDrain
Hulbert Rd
Dobbi
Legend
Outfall
Storages
Conduits
Culvert
Culvert
Ditch
Junctions
Orifice
Weir
Subcatchment
Watercourse
Proposed PCSWMM Model Schematics
N
300 m

APPENDIX

E-2 PCSWMM Outputs

25 mm 4 hr Chicago Water Quality Storm

```
  EPA STORM WATER MANAGEMENT MODEL - VERSION 5.2 (Build 5.2.4)
  ------------------------------------------------------------


  *************
  Element Count
  *************
  Number of rain gages ...... 8
  Number of subcatchments ... 20
  Number of nodes ........... 40
  Number of links ........... 39
  Number of pollutants ...... 0
  Number of land uses ....... 0


  ****************
  Raingage Summary
  ****************
                                                        Data       Recording
  Name                  Data Source                     Type       Interval
  ---------------------------------------------------------------------------
  100yr_SCS_Type_II_12hr 100yr_SCS_Type_II_12hr          INTENSITY    6 min.
  100yr_SCS_Type_II_24hr 100yr_SCS_Type_II_24hr          INTENSITY    6 min.
  10yr_SCS_Type_II_24hr 10yr_SCS_Type_II_24hr           INTENSITY    6 min.
  25mm_WQ_Chicago_4h   25mm_WQ_Chicago_4h               INTENSITY   10 min.
  25yr_SCS_Type_II_24hr 25yr_SCS_Type_II_24hr           INTENSITY    6 min.
  2yr_SCS_Type_II_24hr 2yr_SCS_Type_II_24hr            INTENSITY    6 min.
  50yr_SCS_Type_II_24hr 50yr_SCS_Type_II_24hr           INTENSITY    6 min.
  5yr_SCS_Type_II_24hr 5yr_SCS_Type_II_24hr            INTENSITY    6 min.


  ********************
  Subcatchment Summary
  ********************
  Name                        Area     Width   %Imperv    %Slope Rain Gage
Outlet
  ---------------------------------------------------------------------------------
---------------------------
  101                         2.50    188.38     80.94    1.0000 25mm_WQ_Chicago_4h
J2
  102                         2.06    168.48     77.85    1.0000 25mm_WQ_Chicago_4h
J6
  103                         2.08    152.14     75.89    1.0000 25mm_WQ_Chicago_4h
J1
  104                         2.16    180.69     72.65    1.0000 25mm_WQ_Chicago_4h
J5
  105                         3.45    193.41     49.97    1.0000 25mm_WQ_Chicago_4h
J13
  106                         0.54    438.19     18.82    1.0000 25mm_WQ_Chicago_4h
J8
  107                         0.42    460.87     22.40    1.0000 25mm_WQ_Chicago_4h
J13
  108                         0.60    492.86     19.87    1.0000 25mm_WQ_Chicago_4h
J10
  109                         0.45    530.52     24.09    1.0000 25mm_WQ_Chicago_4h
J15
  110                         0.27    265.20     22.21    1.0000 25mm_WQ_Chicago_4h
J10
```

111	0.21	313.72	25.95	1.0000	25mm_WQ_Chicago_4h
J15					
112	0.37	548.02	24.74	1.0000	25mm_WQ_Chicago_4h
J11					
113	0.35	523.97	25.80	1.0000	25mm_WQ_Chicago_4h
J16					
EXT-1	0.56	70.08	5.00	1.1380	25mm_WQ_Chicago_4h
J2					
EXT-2	0.36	57.70	5.00	1.3800	25mm_WQ_Chicago_4h
J8					
EXT-3	4.83	135.00	5.00	0.2270	25mm_WQ_Chicago_4h
J8					
EXT-4	12.34	211.38	5.00	0.2040	25mm_WQ_Chicago_4h
J9					
EXT-5	12.58	219.50	5.05	0.0810	25mm_WQ_Chicago_4h
J10					
EXT-6	1.12	91.50	5.00	0.4810	25mm_WQ_Chicago_4h
J10					
EXT-7	8.50	225.46	7.72	0.2430	25mm_WQ_Chicago_4h
J11					

****
Node Summary
****

Name	Type	Invert Elev.	Max. Depth	Ponded Area	External Inflow
J1	JUNCTION	82.11	1.00	0.0	
J10	JUNCTION	83.94	1.50	0.0	
J11	JUNCTION	83.48	1.50	0.0	
J12	JUNCTION	82.00	1.50	0.0	
J13	JUNCTION	83.86	1.50	0.0	
J14	JUNCTION	82.10	1.50	0.0	
J15	JUNCTION	83.02	1.50	0.0	
J16	JUNCTION	82.54	1.50	0.0	
J17	JUNCTION	81.77	1.50	0.0	
J18	JUNCTION	83.74	1.50	0.0	
J19	JUNCTION	82.78	1.50	0.0	
J2	JUNCTION	81.44	1.00	0.0	
J20	JUNCTION	82.78	1.50	0.0	
J21	JUNCTION	82.24	1.50	0.0	
J22	JUNCTION	82.24	1.50	0.0	
J23	JUNCTION	82.21	1.50	0.0	
J24	JUNCTION	82.21	1.50	0.0	
J25	JUNCTION	82.24	1.50	0.0	
J26	JUNCTION	82.24	1.50	0.0	
J27	JUNCTION	82.18	1.50	0.0	
J28	JUNCTION	82.18	1.50	0.0	
J29	JUNCTION	82.19	1.50	0.0	
J3	JUNCTION	80.60	1.00	0.0	
J30	JUNCTION	82.19	1.50	0.0	
J31	JUNCTION	82.80	1.50	0.0	
J32	JUNCTION	82.80	1.50	0.0	
J33	JUNCTION	82.19	1.50	0.0	
J34	JUNCTION	82.19	1.50	0.0	
J35	JUNCTION	81.88	1.50	0.0	
J36	JUNCTION	81.88	1.50	0.0	

J4	JUNCTION	83.74	1.50	0.0
J5	JUNCTION	82.29	1.00	0.0
J6	JUNCTION	81.52	1.00	0.0
J7	JUNCTION	80.64	1.00	0.0
J8	JUNCTION	83.86	1.50	0.0
J9	JUNCTION	82.14	1.50	0.0
BerryMunDrain	OUTFALL	82.06	0.30	0.0
CrowderMunDrain	OUTFALL	80.00	0.00	0.0
FergusonMunDrain	OUTFALL	81.85	0.30	0.0
SU1	STORAGE	80.00	3.00	0.0

****
Link Summary
****

Name	From Node	To Node	Type	Length	% Slope	Roughness
C1	J1	J2	CONDUIT	135.3	0.4997	0.0350
C10_1	J10	J4	CONDUIT	67.2	0.3006	0.0350
C10_2	J18	J11	CONDUIT	79.4	0.3275	0.0350
C11_1	J11	J19	CONDUIT	116.9	0.5997	0.0350
C11_3	J20	J23	CONDUIT	97.6	0.5820	0.0350
C11_4	J24	J12	CONDUIT	30.1	0.7019	0.0350
C12_1	J13	J27	CONDUIT	229.4	0.7307	0.0350
C12_2	J28	J14	CONDUIT	17.8	0.4891	0.0350
C13_1	J15	J29	CONDUIT	279.5	0.2966	0.0350
C13_2	J30	J14	CONDUIT	18.4	0.5011	0.0350
C14_1	J15	J31	CONDUIT	71.8	0.3007	0.0350
C14_2	J32	J16	CONDUIT	78.7	0.3278	0.0350
C15_1	J16	J33	CONDUIT	117.5	0.3003	0.0350
C15_3	J34	J35	CONDUIT	97.6	0.3216	0.0350
C15_4	J36	J17	CONDUIT	27.7	0.3748	0.0350
C17	J17	FergusonMunDrain	CONDUIT	8.4	0.5968	0.0100
C19	J9	J14	CONDUIT	13.7	0.2982	0.0130
C2	J2	J3	CONDUIT	168.2	0.5001	0.0350
C20	J14	BerryMunDrain	CONDUIT	13.2	0.3020	0.0130
C3	J3	SU1	CONDUIT	119.2	0.5001	0.0350

```
  C4                J5                J6                CONDUIT          153.8
0.5001    0.0350
  C5                J6                J7                CONDUIT          176.2
0.5001    0.0350
  C6                J7                SU1               CONDUIT          127.4
0.4999    0.0350
  C7                J12               J17               CONDUIT           13.9
0.7203    0.0100
  C8                J8                J25               CONDUIT          225.6
0.7186    0.0350
  C8_2              J26               J9                CONDUIT           20.1
0.5015    0.0350
  C9_1              J10               J21               CONDUIT          285.7
0.5946    0.0350
  C9_2              J22               J9                CONDUIT           17.6
0.5973    0.0350
  C16               SU1               CrowderMunDrain   ORIFICE
  W1                J4                J18               WEIR
  W10               J35               J36               WEIR
  W2                J19               J20               WEIR
  W3                J21               J22               WEIR
  W4                J23               J24               WEIR
  W5                J25               J26               WEIR
  W6                J27               J28               WEIR
  W7                J29               J30               WEIR
  W8                J31               J32               WEIR
  W9                J33               J34               WEIR


  *********************
  Cross Section Summary
  *********************
                                        Full     Full     Hyd.     Max.   No. of
Full
  Conduit           Shape               Depth     Area     Rad.    Width  Barrels
Flow
  ---------------------------------------------------------------------------------
------
  C1                TRAPEZOIDAL          1.00     4.00     0.55     7.00        1
5.40
  C10_1             TRAPEZOIDAL          1.50     9.75     0.85    11.00        1
13.69
  C10_2             TRAPEZOIDAL          1.50     9.75     0.85    11.00        1
14.29
  C11_1             TRAPEZOIDAL          1.50     9.75     0.85    11.00        1
19.34
  C11_3             TRAPEZOIDAL          1.50     9.75     0.85    11.00        1
19.05
  C11_4             TRAPEZOIDAL          1.50     9.75     0.85    11.00        1
20.93
  C12_1             TRAPEZOIDAL          1.50     9.75     0.85    11.00        1
21.35
  C12_2             TRAPEZOIDAL          1.50     9.75     0.85    11.00        1
17.47
  C13_1             TRAPEZOIDAL          1.50     9.75     0.85    11.00        1
13.60
  C13_2             TRAPEZOIDAL          1.50     9.75     0.85    11.00        1
17.68
  C14_1             TRAPEZOIDAL          1.50     9.75     0.85    11.00        1
13.70
```

```
  C14_2            TRAPEZOIDAL          1.50     9.75     0.85    11.00        1
14.30
  C15_1            TRAPEZOIDAL          1.50     9.75     0.85    11.00        1
13.69
  C15_3            TRAPEZOIDAL          1.50     9.75     0.85    11.00        1
14.17
  C15_4            TRAPEZOIDAL          1.50     9.75     0.85    11.00        1
15.29
  C17              CIRCULAR             0.30     0.07     0.07     0.30        1
0.10
  C19              CIRCULAR             0.30     0.07     0.07     0.30        1
0.05
  C2               TRAPEZOIDAL          1.00     4.00     0.55     7.00        1
5.40
  C20              CIRCULAR             0.30     0.07     0.07     0.30        1
0.05
  C3               TRAPEZOIDAL          1.00     4.00     0.55     7.00        1
5.40
  C4               TRAPEZOIDAL          1.00     4.00     0.55     7.00        1
5.40
  C5               TRAPEZOIDAL          1.00     4.00     0.55     7.00        1
5.40
  C6               TRAPEZOIDAL          1.00     4.00     0.55     7.00        1
5.40
  C7               CIRCULAR             0.30     0.07     0.07     0.30        1
0.11
  C8               TRAPEZOIDAL          1.50     9.75     0.85    11.00        1
21.17
  C8_2             TRAPEZOIDAL          1.50     9.75     0.85    11.00        1
17.69
  C9_1             TRAPEZOIDAL          1.50     9.75     0.85    11.00        1
19.26
  C9_2             TRAPEZOIDAL          1.50     9.75     0.85    11.00        1
19.30


  ****************
  Analysis Options
  ****************
  Flow Units ............... CMS
  Process Models:
    Rainfall/Runoff ........ YES
    RDII ................... NO
    Snowmelt ............... NO
    Groundwater ............ NO
    Flow Routing ........... YES
    Ponding Allowed ........ NO
    Water Quality .......... NO
  Infiltration Method ...... HORTON
  Flow Routing Method ...... DYNWAVE
  Surcharge Method ......... EXTRAN
  Starting Date ............ 01/27/2025 00:00:00
  Ending Date .............. 01/28/2025 00:00:00
  Antecedent Dry Days ...... 0.0
  Report Time Step ......... 00:01:00
  Wet Time Step ............ 00:05:00
  Dry Time Step ............ 00:05:00
  Routing Time Step ........ 5.00 sec
  Variable Time Step ....... YES
```

```
Maximum Trials ........... 8
Number of Threads ........ 8
Head Tolerance ........... 0.001500 m

**************************        Volume         Depth
Runoff Quantity Continuity     hectare-m            mm
**************************     ---------       -------
Total Precipitation ......         1.393        24.998
Evaporation Loss .........         0.000         0.000
Infiltration Loss ........         1.045        18.754
Surface Runoff ...........         0.277         4.974
Final Storage ............         0.073         1.303
Continuity Error (%) .....        -0.131

**************************        Volume        Volume
Flow Routing Continuity        hectare-m      10^6 ltr
**************************     ---------     ---------
Dry Weather Inflow .......         0.000         0.000
Wet Weather Inflow .......         0.277         2.772
Groundwater Inflow .......         0.000         0.000
RDII Inflow ..............         0.000         0.000
External Inflow ..........         0.000         0.000
External Outflow .........         0.177         1.772
Flooding Loss ............         0.000         0.000
Evaporation Loss .........         0.000         0.000
Exfiltration Loss ........         0.000         0.000
Initial Stored Volume ....         0.000         0.000
Final Stored Volume ......         0.113         1.131
Continuity Error (%) .....        -4.738

*************************
Highest Continuity Errors
*************************
Node J21 (100.00%)
Node J25 (100.00%)
Node J27 (100.00%)
Node J29 (100.00%)
Node J33 (100.00%)

***************************
Time-Step Critical Elements
***************************
Link C20 (1.31%)
Link C19 (1.03%)

********************************
Highest Flow Instability Indexes
********************************
All links are stable.

********************************
```

Most Frequent Nonconverging Nodes
****
Convergence obtained at all time steps.

****
Routing Time Step Summary
****

Minimum Time Step	:	2.43 sec
Average Time Step	:	4.98 sec
Maximum Time Step	:	5.00 sec
% of Time in Steady State	:	0.00
Average Iterations per Step	:	2.00
% of Steps Not Converging	:	0.00
Time Step Frequencies	:	
5.000 - 3.155 sec	:	99.99 %
3.155 - 1.991 sec	:	0.01 %
1.991 - 1.256 sec	:	0.00 %
1.256 - 0.792 sec	:	0.00 %
0.792 - 0.500 sec	:	0.00 %

****
Subcatchment Runoff Summary
****

Subcatchment	Total Precip mm	Total Runon mm	Total Evap mm	Total Infil mm	Imperv Runoff mm	Perv Runoff mm	Total Runoff mm	Total Runoff 10^6 ltr	Peak Runoff CMS	Runoff Coeff
101	25.00	0.00	0.00	4.48	19.07	0.04	19.11	0.48	0.26	0.765
102	25.00	0.00	0.00	5.22	18.35	0.05	18.40	0.38	0.21	0.736
103	25.00	0.00	0.00	5.69	17.88	0.05	17.93	0.37	0.20	0.717
104	25.00	0.00	0.00	6.45	17.13	0.05	17.18	0.37	0.22	0.687
105	25.00	0.00	0.00	11.78	11.78	0.10	11.88	0.41	0.23	0.475
106	25.00	0.00	0.00	18.38	4.42	0.92	5.34	0.03	0.02	0.213
107	25.00	0.00	0.00	17.45	5.26	1.00	6.26	0.03	0.02	0.250
108	25.00	0.00	0.00	17.78	4.67	1.25	5.92	0.04	0.02	0.237
109	25.00	0.00	0.00	16.72	5.66	1.30	6.96	0.03	0.02	0.278
110	25.00	0.00	0.00	18.14	5.22	0.33	5.55	0.01	0.01	0.222
111	25.00	0.00	0.00	17.22	6.10	0.38	6.47	0.01	0.01	0.259

```
  112                        25.00       0.00       0.00      17.26       5.81
0.65       6.46        0.02     0.02   0.258
  113                        25.00       0.00       0.00      16.92       6.06
0.71       6.77        0.02     0.02   0.271
  EXT-1                      25.00       0.00       0.00      22.49       1.17
0.10       1.27        0.01     0.00   0.051
  EXT-2                      25.00       0.00       0.00      22.42       1.17
0.13       1.30        0.00     0.00   0.052
  EXT-3                      25.00       0.00       0.00      22.58       1.18
0.02       1.20        0.06     0.04   0.048
  EXT-4                      25.00       0.00       0.00      22.44       1.18
0.14       1.32        0.16     0.10   0.053
  EXT-5                      25.00       0.00       0.00      22.49       1.19
0.06       1.25        0.16     0.10   0.050
  EXT-6                      25.00       0.00       0.00      22.55       1.18
0.05       1.22        0.01     0.01   0.049
  EXT-7                      25.00       0.00       0.00      21.90       1.85
0.02       1.87        0.16     0.11   0.075


  ******************
  Node Depth Summary
  ******************
```

Node	Type	Average Depth Meters	Maximum Depth Meters	Maximum HGL Meters	Time of Max Occurrence days hr:min	Reported Max Depth Meters
J1	JUNCTION	0.01	0.21	82.32	0 01:51	0.21
J10	JUNCTION	0.01	0.10	84.04	0 01:53	0.10
J11	JUNCTION	0.06	0.11	83.59	0 01:50	0.11
J12	JUNCTION	0.00	0.00	82.00	0 00:00	0.00
J13	JUNCTION	0.01	0.15	84.01	0 01:51	0.15
J14	JUNCTION	0.02	0.24	82.33	0 01:55	0.24
J15	JUNCTION	0.00	0.04	83.05	0 01:52	0.04
J16	JUNCTION	0.00	0.04	82.58	0 01:51	0.04
J17	JUNCTION	0.00	0.00	81.77	0 00:00	0.00
J18	JUNCTION	0.00	0.00	83.74	0 00:00	0.00
J19	JUNCTION	0.70	0.76	83.54	0 17:22	0.76
J2	JUNCTION	0.02	0.33	81.76	0 01:52	0.32
J20	JUNCTION	0.00	0.00	82.78	0 00:00	0.00
J21	JUNCTION	0.42	0.47	82.71	1 00:00	0.47
J22	JUNCTION	0.00	0.17	82.41	0 01:52	0.17
J23	JUNCTION	0.00	0.00	82.21	0 00:00	0.00
J24	JUNCTION	0.00	0.00	82.21	0 00:00	0.00
J25	JUNCTION	0.27	0.30	82.54	1 00:00	0.30
J26	JUNCTION	0.00	0.17	82.41	0 01:52	0.17
J27	JUNCTION	0.84	0.93	83.11	1 00:00	0.93
J28	JUNCTION	0.00	0.15	82.33	0 01:55	0.15
J29	JUNCTION	0.07	0.08	82.27	1 00:00	0.08
J3	JUNCTION	0.02	0.31	80.90	0 01:54	0.31
J30	JUNCTION	0.00	0.15	82.33	0 01:55	0.15
J31	JUNCTION	0.20	0.23	83.03	0 04:02	0.23
J32	JUNCTION	0.00	0.00	82.80	0 00:00	0.00
J33	JUNCTION	0.15	0.17	82.36	1 00:00	0.17
J34	JUNCTION	0.00	0.00	82.19	0 00:00	0.00
J35	JUNCTION	0.00	0.00	81.88	0 00:00	0.00

```
  J36                  JUNCTION     0.00     0.00    81.88     0  00:00        0.00
  J4                   JUNCTION     0.19     0.30    84.04     0  01:51        0.30
  J5                   JUNCTION     0.01     0.21    82.50     0  01:51        0.21
  J6                   JUNCTION     0.02     0.32    81.84     0  01:52        0.32
  J7                   JUNCTION     0.02     0.28    80.92     0  01:57        0.28
  J8                   JUNCTION     0.00     0.07    83.93     0  01:50        0.07
  J9                   JUNCTION     0.02     0.27    82.41     0  01:52        0.27
  BerryMunDrain        OUTFALL      0.01     0.20    82.25     0  01:55        0.20
  CrowderMunDrain      OUTFALL      0.00     0.00    80.00     0  00:00        0.00
  FergusonMunDrain     OUTFALL      0.00     0.00    81.85     0  00:00        0.00
  SU1                  STORAGE      0.12     0.67    80.67     0  02:46        0.67


  *******************
  Node Inflow Summary
  *******************

  -------------------------------------------------------------------------------
----------------
                                   Maximum  Maximum                   Lateral
Total        Flow
                                   Lateral    Total  Time of Max      Inflow
Inflow     Balance
                                    Inflow   Inflow   Occurrence      Volume
Volume       Error
  Node                 Type           CMS      CMS  days hr:min    10^6 ltr    10^6
ltr     Percent
  -------------------------------------------------------------------------------
----------------
  J1                   JUNCTION     0.205    0.205     0  01:50       0.373
0.373      -0.104
  J10                  JUNCTION     0.138    0.138     0  01:50       0.221
0.234      -2.627
  J11                  JUNCTION     0.124    0.124     0  01:50       0.183
0.203       6.659
  J12                  JUNCTION     0.000    0.000     0  00:00           0
0       0.000 ltr
  J13                  JUNCTION     0.250    0.250     0  01:50       0.436
0.436      -3.164
  J14                  JUNCTION     0.000    0.074     0  01:51           0
0.17       0.030
  J15                  JUNCTION     0.028    0.028     0  01:45      0.0445
0.0462      -1.096
  J16                  JUNCTION     0.015    0.015     0  01:45      0.0236
0.0236      -1.277
  J17                  JUNCTION     0.000    0.000     0  00:00           0
0       0.000 ltr
  J18                  JUNCTION     0.000    0.000     0  00:00           0
0       0.000 ltr
  J19                  JUNCTION     0.000    0.112     0  01:50           0
0.191     820.408
  J2                   JUNCTION     0.264    0.445     0  01:50       0.485
0.859      -0.245
  J20                  JUNCTION     0.000    0.000     0  00:00           0
0       0.000 ltr
  J21                  JUNCTION     0.000    0.093     0  01:53           0
0.21  210317.729 ltr
  J22                  JUNCTION     0.000    0.008     0  01:45           0
0.00397       0.420
```

```
  J23                  JUNCTION     0.000    0.000     0  00:00           0
0       0.000 ltr
  J24                  JUNCTION     0.000    0.000     0  00:00           0
0       0.000 ltr
  J25                  JUNCTION     0.000    0.056     0  01:50           0
0.0934   93352.624 ltr
  J26                  JUNCTION     0.000    0.009     0  01:45           0
0.00467       0.418
  J27                  JUNCTION     0.000    0.222     0  01:51           0
0.45  449956.882 ltr
  J28                  JUNCTION     0.000    0.006     0  01:46           0
0.00345       0.352
  J29                  JUNCTION     0.000    0.006     0  01:54           0
0.0254   25399.392 ltr
  J3                   JUNCTION     0.000    0.423     0  01:53           0
0.861      -1.096
  J30                  JUNCTION     0.000    0.006     0  01:46           0
0.00344       0.365
  J31                  JUNCTION     0.000    0.013     0  01:52           0
0.0213    1143.750
  J32                  JUNCTION     0.000    0.000     0  00:00           0
0       0.000 ltr
  J33                  JUNCTION     0.000    0.013     0  01:52           0
0.0239   23904.512 ltr
  J34                  JUNCTION     0.000    0.000     0  00:00           0
0       0.000 ltr
  J35                  JUNCTION     0.000    0.000     0  00:00           0
0       0.000 ltr
  J36                  JUNCTION     0.000    0.000     0  00:00           0
0       0.000 ltr
  J4                   JUNCTION     0.000    0.057     0  01:50           0
0.0296     142.063
  J5                   JUNCTION     0.215    0.215     0  01:50       0.371
0.371      -0.171
  J6                   JUNCTION     0.214    0.403     0  01:50        0.38
0.752      -0.324
  J7                   JUNCTION     0.000    0.374     0  01:54           0
0.754      -1.109
  J8                   JUNCTION     0.061    0.061     0  01:50      0.0914
0.0914      -2.136
  J9                   JUNCTION     0.101    0.101     0  01:50       0.163
0.171       0.001
  BerryMunDrain        OUTFALL      0.000    0.064     0  01:55           0
0.163       0.000
  CrowderMunDrain      OUTFALL      0.000    0.104     0  02:46           0
1.61       0.000
  FergusonMunDrain     OUTFALL      0.000    0.000     0  00:00           0
0       0.000 ltr
  SU1                  STORAGE      0.000    0.744     0  01:55           0
1.63       1.508


  **********************
  Node Surcharge Summary
  **********************

  No nodes were surcharged.
```

```
  **********************
  Node Flooding Summary
  **********************

  No nodes were flooded.


  **********************
  Storage Volume Summary
  **********************

  -------------------------------------------------------------------------------
---------------
                          Average    Avg   Evap  Exfil     Maximum    Max    Time of
Max    Maximum
                           Volume   Pcnt   Pcnt   Pcnt      Volume   Pcnt
Occurrence    Outflow
  Storage Unit            1000 m³   Full   Loss   Loss     1000 m³   Full    days
hr:min        CMS
  -------------------------------------------------------------------------------
---------------
  SU1                       0.085    0.6    0.0    0.0       0.674    5.0       0
02:46      0.104


  ************************
  Outfall Loading Summary
  ************************

  ------------------------------------------------------------
                        Flow       Avg       Max       Total
                        Freq      Flow      Flow      Volume
  Outfall Node          Pcnt       CMS       CMS    10^6 ltr
  ------------------------------------------------------------
  BerryMunDrain        35.89     0.006     0.064       0.163
  CrowderMunDrain      93.82     0.020     0.104       1.609
  FergusonMunDrain      0.00     0.000     0.000       0.000
  ------------------------------------------------------------
  System               43.24     0.026     0.138       1.772


  ********************
  Link Flow Summary
  ********************

  ---------------------------------------------------------------------------
                                Maximum  Time of Max   Maximum    Max/    Max/
                                 |Flow|   Occurrence   |Veloc|    Full    Full
  Link                 Type        CMS  days hr:min     m/sec    Flow   Depth
  ---------------------------------------------------------------------------
  C1                   CONDUIT     0.189     0  01:51      0.40    0.04    0.27
  C10_1                CONDUIT     0.057     0  01:50      0.14    0.00    0.13
  C10_2                CONDUIT     0.000     0  00:00      0.00    0.00    0.04
  C11_1                CONDUIT     0.112     0  01:50      0.22    0.01    0.27
  C11_3                CONDUIT     0.000     0  00:00      0.00    0.00    0.00
  C11_4                CONDUIT     0.000     0  00:00      0.00    0.00    0.00
  C12_1                CONDUIT     0.222     0  01:51      0.42    0.01    0.31
```

C12_2	CONDUIT	0.006	0	01:46	0.03	0.00	0.13
C13_1	CONDUIT	0.006	0	01:54	0.13	0.00	0.03
C13_2	CONDUIT	0.006	0	01:46	0.03	0.00	0.13
C14_1	CONDUIT	0.013	0	01:52	0.12	0.00	0.08
C14_2	CONDUIT	0.000	0	00:00	0.00	0.00	0.01
C15_1	CONDUIT	0.013	0	01:52	0.17	0.00	0.06
C15_3	CONDUIT	0.000	0	00:00	0.00	0.00	0.00
C15_4	CONDUIT	0.000	0	00:00	0.00	0.00	0.00
C17	CONDUIT	0.000	0	00:00	0.00	0.00	0.00
C19	CONDUIT	0.074	0	01:51	1.31	1.40	0.84
C2	CONDUIT	0.423	0	01:53	0.70	0.08	0.31
C20	CONDUIT	0.064	0	01:55	1.17	1.21	0.72
C3	CONDUIT	0.410	0	01:54	0.68	0.08	0.40
C4	CONDUIT	0.197	0	01:51	0.42	0.04	0.27
C5	CONDUIT	0.374	0	01:54	0.68	0.07	0.29
C6	CONDUIT	0.345	0	01:57	0.61	0.06	0.40
C7	CONDUIT	0.000	0	00:00	0.00	0.00	0.00
C8	CONDUIT	0.056	0	01:50	0.36	0.00	0.10
C8_2	CONDUIT	0.009	0	01:45	0.03	0.00	0.15
C9_1	CONDUIT	0.093	0	01:53	0.41	0.00	0.16
C9_2	CONDUIT	0.008	0	01:45	0.03	0.00	0.15
C16	ORIFICE	0.104	0	02:46			1.00
W1	WEIR	0.000	0	00:00			0.00
W10	WEIR	0.000	0	00:00			0.00
W2	WEIR	0.000	0	00:00			0.00
W3	WEIR	0.000	0	00:00			0.00
W4	WEIR	0.000	0	00:00			0.00
W5	WEIR	0.000	0	00:00			0.00
W6	WEIR	0.000	0	00:00			0.00
W7	WEIR	0.000	0	00:00			0.00
W8	WEIR	0.000	0	00:00			0.00
W9	WEIR	0.000	0	00:00			0.00

****
Flow Classification Summary
****

Conduit	Adjusted /Actual Length	Dry	Up Dry	Down Dry	Sub Crit	Sup Crit	Up Crit	Down Crit	Norm Ltd	Inlet Ctrl
		---------- Fraction of Time in Flow Class -------								
C1	1.00	0.04	0.00	0.00	0.96	0.00	0.00	0.00	0.95	0.00
C10_1	1.00	0.04	0.00	0.00	0.96	0.00	0.00	0.00	0.02	0.00
C10_2	1.00	0.01	0.99	0.00	0.00	0.00	0.00	0.00	0.00	0.00
C11_1	1.00	0.01	0.00	0.00	0.99	0.00	0.00	0.00	0.07	0.00
C11_3	1.00	1.00	0.00	0.00	0.00	0.00	0.00	0.00	0.00	0.00

C11_4	1.00	1.00	0.00	0.00	0.00	0.00	0.00	0.00	0.00
0.00									
C12_1	1.00	0.04	0.00	0.00	0.96	0.00	0.00	0.00	0.93
0.00									
C12_2	1.00	0.04	0.84	0.00	0.12	0.00	0.00	0.00	0.89
0.00									
C13_1	1.00	0.04	0.00	0.00	0.96	0.00	0.00	0.00	0.91
0.00									
C13_2	1.00	0.04	0.84	0.00	0.12	0.00	0.00	0.00	0.90
0.00									
C14_1	1.00	0.04	0.00	0.00	0.96	0.00	0.00	0.00	0.07
0.00									
C14_2	1.00	0.04	0.96	0.00	0.00	0.00	0.00	0.00	0.00
0.00									
C15_1	1.00	0.04	0.00	0.00	0.96	0.00	0.00	0.00	0.92
0.00									
C15_3	1.00	1.00	0.00	0.00	0.00	0.00	0.00	0.00	0.00
0.00									
C15_4	1.00	1.00	0.00	0.00	0.00	0.00	0.00	0.00	0.00
0.00									
C17	1.00	1.00	0.00	0.00	0.00	0.00	0.00	0.00	0.00
0.00									
C19	1.00	0.04	0.00	0.00	0.94	0.02	0.00	0.00	0.89
0.00									
C2	1.00	0.04	0.00	0.00	0.96	0.00	0.00	0.00	0.92
0.00									
C20	1.00	0.04	0.00	0.00	0.92	0.03	0.00	0.00	0.00
0.00									
C3	1.00	0.05	0.00	0.00	0.95	0.00	0.00	0.00	0.92
0.00									
C4	1.00	0.04	0.00	0.00	0.96	0.00	0.00	0.00	0.94
0.00									
C5	1.00	0.04	0.00	0.00	0.96	0.00	0.00	0.00	0.92
0.00									
C6	1.00	0.05	0.00	0.00	0.95	0.00	0.00	0.00	0.92
0.00									
C7	1.00	1.00	0.00	0.00	0.00	0.00	0.00	0.00	0.00
0.00									
C8	1.00	0.04	0.00	0.00	0.96	0.00	0.00	0.00	0.93
0.00									
C8_2	1.00	0.04	0.84	0.00	0.12	0.00	0.00	0.00	0.90
0.00									
C9_1	1.00	0.04	0.00	0.00	0.96	0.00	0.00	0.00	0.92
0.00									
C9_2	1.00	0.04	0.86	0.00	0.10	0.00	0.00	0.00	0.90
0.00									

****
Conduit Surcharge Summary
****

Conduit	Hours Full Both Ends	Hours Full Upstream	Hours Full Dnstream	Hours Above Full Normal Flow	Hours Capacity Limited
C19	0.01	0.01	0.01	0.21	0.01
C20	0.01	0.01	0.01	0.19	0.01

```
Analysis begun on:  Wed Feb 19 10:16:08 2025
Analysis ended on:  Wed Feb 19 10:16:08 2025
Total elapsed time: < 1 sec
```

2 yr - SCS Type II 24 hr storm

```
  EPA STORM WATER MANAGEMENT MODEL - VERSION 5.2 (Build 5.2.4)
  ------------------------------------------------------------


  *************
  Element Count
  *************
  Number of rain gages ...... 8
  Number of subcatchments ... 20
  Number of nodes ........... 40
  Number of links ........... 39
  Number of pollutants ...... 0
  Number of land uses ....... 0


  ****************
  Raingage Summary
  ****************
                                                        Data       Recording
  Name                 Data Source                      Type       Interval
  ---------------------------------------------------------------------------
  100yr_SCS_Type_II_12hr 100yr_SCS_Type_II_12hr          INTENSITY    6 min.
  100yr_SCS_Type_II_24hr 100yr_SCS_Type_II_24hr          INTENSITY    6 min.
  10yr_SCS_Type_II_24hr 10yr_SCS_Type_II_24hr           INTENSITY    6 min.
  25mm_WQ_Chicago_4h   25mm_WQ_Chicago_4h               INTENSITY   10 min.
  25yr_SCS_Type_II_24hr 25yr_SCS_Type_II_24hr           INTENSITY    6 min.
  2yr_SCS_Type_II_24hr 2yr_SCS_Type_II_24hr            INTENSITY    6 min.
  50yr_SCS_Type_II_24hr 50yr_SCS_Type_II_24hr           INTENSITY    6 min.
  5yr_SCS_Type_II_24hr 5yr_SCS_Type_II_24hr            INTENSITY    6 min.


  ********************
  Subcatchment Summary
  ********************
  Name                        Area     Width   %Imperv    %Slope Rain Gage
Outlet
  ---------------------------------------------------------------------------------
---------------------------
  101                         2.50    188.38     80.94    1.0000
2yr_SCS_Type_II_24hr J2
  102                         2.06    168.48     77.85    1.0000
2yr_SCS_Type_II_24hr J6
  103                         2.08    152.14     75.89    1.0000
2yr_SCS_Type_II_24hr J1
  104                         2.16    180.69     72.65    1.0000
2yr_SCS_Type_II_24hr J5
  105                         3.45    193.41     49.97    1.0000
2yr_SCS_Type_II_24hr J13
  106                         0.54    438.19     18.82    1.0000
2yr_SCS_Type_II_24hr J8
  107                         0.42    460.87     22.40    1.0000
2yr_SCS_Type_II_24hr J13
  108                         0.60    492.86     19.87    1.0000
2yr_SCS_Type_II_24hr J10
  109                         0.45    530.52     24.09    1.0000
2yr_SCS_Type_II_24hr J15
  110                         0.27    265.20     22.21    1.0000
2yr_SCS_Type_II_24hr J10
```

111	0.21	313.72	25.95	1.0000	2yr_SCS_Type_II_24hr J15
112	0.37	548.02	24.74	1.0000	2yr_SCS_Type_II_24hr J11
113	0.35	523.97	25.80	1.0000	2yr_SCS_Type_II_24hr J16
EXT-1	0.56	70.08	5.00	1.1380	2yr_SCS_Type_II_24hr J2
EXT-2	0.36	57.70	5.00	1.3800	2yr_SCS_Type_II_24hr J8
EXT-3	4.83	135.00	5.00	0.2270	2yr_SCS_Type_II_24hr J8
EXT-4	12.34	211.38	5.00	0.2040	2yr_SCS_Type_II_24hr J9
EXT-5	12.58	219.50	5.05	0.0810	2yr_SCS_Type_II_24hr J10
EXT-6	1.12	91.50	5.00	0.4810	2yr_SCS_Type_II_24hr J10
EXT-7	8.50	225.46	7.72	0.2430	2yr_SCS_Type_II_24hr J11

****
Node Summary
****

Name	Type	Invert Elev.	Max. Depth	Ponded Area	External Inflow
J1	JUNCTION	82.11	1.00	0.0	
J10	JUNCTION	83.94	1.50	0.0	
J11	JUNCTION	83.48	1.50	0.0	
J12	JUNCTION	82.00	1.50	0.0	
J13	JUNCTION	83.86	1.50	0.0	
J14	JUNCTION	82.10	1.50	0.0	
J15	JUNCTION	83.02	1.50	0.0	
J16	JUNCTION	82.54	1.50	0.0	
J17	JUNCTION	81.77	1.50	0.0	
J18	JUNCTION	83.74	1.50	0.0	
J19	JUNCTION	82.78	1.50	0.0	
J2	JUNCTION	81.44	1.00	0.0	
J20	JUNCTION	82.78	1.50	0.0	
J21	JUNCTION	82.24	1.50	0.0	
J22	JUNCTION	82.24	1.50	0.0	
J23	JUNCTION	82.21	1.50	0.0	
J24	JUNCTION	82.21	1.50	0.0	
J25	JUNCTION	82.24	1.50	0.0	
J26	JUNCTION	82.24	1.50	0.0	
J27	JUNCTION	82.18	1.50	0.0	
J28	JUNCTION	82.18	1.50	0.0	
J29	JUNCTION	82.19	1.50	0.0	
J3	JUNCTION	80.60	1.00	0.0	
J30	JUNCTION	82.19	1.50	0.0	
J31	JUNCTION	82.80	1.50	0.0	
J32	JUNCTION	82.80	1.50	0.0	
J33	JUNCTION	82.19	1.50	0.0	
J34	JUNCTION	82.19	1.50	0.0	
J35	JUNCTION	81.88	1.50	0.0	
J36	JUNCTION	81.88	1.50	0.0	

J4	JUNCTION	83.74	1.50	0.0
J5	JUNCTION	82.29	1.00	0.0
J6	JUNCTION	81.52	1.00	0.0
J7	JUNCTION	80.64	1.00	0.0
J8	JUNCTION	83.86	1.50	0.0
J9	JUNCTION	82.14	1.50	0.0
BerryMunDrain	OUTFALL	82.06	0.30	0.0
CrowderMunDrain	OUTFALL	80.00	0.00	0.0
FergusonMunDrain	OUTFALL	81.85	0.30	0.0
SU1	STORAGE	80.00	3.00	0.0

****
Link Summary
****

Name	From Node	To Node	Type	Length	% Slope	Roughness
C1	J1	J2	CONDUIT	135.3	0.4997	0.0350
C10_1	J10	J4	CONDUIT	67.2	0.3006	0.0350
C10_2	J18	J11	CONDUIT	79.4	0.3275	0.0350
C11_1	J11	J19	CONDUIT	116.9	0.5997	0.0350
C11_3	J20	J23	CONDUIT	97.6	0.5820	0.0350
C11_4	J24	J12	CONDUIT	30.1	0.7019	0.0350
C12_1	J13	J27	CONDUIT	229.4	0.7307	0.0350
C12_2	J28	J14	CONDUIT	17.8	0.4891	0.0350
C13_1	J15	J29	CONDUIT	279.5	0.2966	0.0350
C13_2	J30	J14	CONDUIT	18.4	0.5011	0.0350
C14_1	J15	J31	CONDUIT	71.8	0.3007	0.0350
C14_2	J32	J16	CONDUIT	78.7	0.3278	0.0350
C15_1	J16	J33	CONDUIT	117.5	0.3003	0.0350
C15_3	J34	J35	CONDUIT	97.6	0.3216	0.0350
C15_4	J36	J17	CONDUIT	27.7	0.3748	0.0350
C17	J17	FergusonMunDrain	CONDUIT	8.4	0.5968	0.0100
C19	J9	J14	CONDUIT	13.7	0.2982	0.0130
C2	J2	J3	CONDUIT	168.2	0.5001	0.0350
C20	J14	BerryMunDrain	CONDUIT	13.2	0.3020	0.0130
C3	J3	SU1	CONDUIT	119.2	0.5001	0.0350

```
  C4                J5                J6                CONDUIT          153.8
0.5001    0.0350
  C5                J6                J7                CONDUIT          176.2
0.5001    0.0350
  C6                J7                SU1               CONDUIT          127.4
0.4999    0.0350
  C7                J12               J17               CONDUIT           13.9
0.7203    0.0100
  C8                J8                J25               CONDUIT          225.6
0.7186    0.0350
  C8_2              J26               J9                CONDUIT           20.1
0.5015    0.0350
  C9_1              J10               J21               CONDUIT          285.7
0.5946    0.0350
  C9_2              J22               J9                CONDUIT           17.6
0.5973    0.0350
  C16               SU1               CrowderMunDrain   ORIFICE
  W1                J4                J18               WEIR
  W10               J35               J36               WEIR
  W2                J19               J20               WEIR
  W3                J21               J22               WEIR
  W4                J23               J24               WEIR
  W5                J25               J26               WEIR
  W6                J27               J28               WEIR
  W7                J29               J30               WEIR
  W8                J31               J32               WEIR
  W9                J33               J34               WEIR


  *********************
  Cross Section Summary
  *********************
                                        Full     Full     Hyd.     Max.   No. of
Full
  Conduit           Shape               Depth     Area     Rad.    Width  Barrels
Flow
  ---------------------------------------------------------------------------------
------
  C1                TRAPEZOIDAL          1.00     4.00     0.55     7.00        1
5.40
  C10_1             TRAPEZOIDAL          1.50     9.75     0.85    11.00        1
13.69
  C10_2             TRAPEZOIDAL          1.50     9.75     0.85    11.00        1
14.29
  C11_1             TRAPEZOIDAL          1.50     9.75     0.85    11.00        1
19.34
  C11_3             TRAPEZOIDAL          1.50     9.75     0.85    11.00        1
19.05
  C11_4             TRAPEZOIDAL          1.50     9.75     0.85    11.00        1
20.93
  C12_1             TRAPEZOIDAL          1.50     9.75     0.85    11.00        1
21.35
  C12_2             TRAPEZOIDAL          1.50     9.75     0.85    11.00        1
17.47
  C13_1             TRAPEZOIDAL          1.50     9.75     0.85    11.00        1
13.60
  C13_2             TRAPEZOIDAL          1.50     9.75     0.85    11.00        1
17.68
  C14_1             TRAPEZOIDAL          1.50     9.75     0.85    11.00        1
13.70
```

```
  C14_2            TRAPEZOIDAL          1.50     9.75     0.85    11.00        1
14.30
  C15_1            TRAPEZOIDAL          1.50     9.75     0.85    11.00        1
13.69
  C15_3            TRAPEZOIDAL          1.50     9.75     0.85    11.00        1
14.17
  C15_4            TRAPEZOIDAL          1.50     9.75     0.85    11.00        1
15.29
  C17              CIRCULAR             0.30     0.07     0.07     0.30        1
0.10
  C19              CIRCULAR             0.30     0.07     0.07     0.30        1
0.05
  C2               TRAPEZOIDAL          1.00     4.00     0.55     7.00        1
5.40
  C20              CIRCULAR             0.30     0.07     0.07     0.30        1
0.05
  C3               TRAPEZOIDAL          1.00     4.00     0.55     7.00        1
5.40
  C4               TRAPEZOIDAL          1.00     4.00     0.55     7.00        1
5.40
  C5               TRAPEZOIDAL          1.00     4.00     0.55     7.00        1
5.40
  C6               TRAPEZOIDAL          1.00     4.00     0.55     7.00        1
5.40
  C7               CIRCULAR             0.30     0.07     0.07     0.30        1
0.11
  C8               TRAPEZOIDAL          1.50     9.75     0.85    11.00        1
21.17
  C8_2             TRAPEZOIDAL          1.50     9.75     0.85    11.00        1
17.69
  C9_1             TRAPEZOIDAL          1.50     9.75     0.85    11.00        1
19.26
  C9_2             TRAPEZOIDAL          1.50     9.75     0.85    11.00        1
19.30


  ****************
  Analysis Options
  ****************
  Flow Units ............... CMS
  Process Models:
    Rainfall/Runoff ........ YES
    RDII ................... NO
    Snowmelt ............... NO
    Groundwater ............ NO
    Flow Routing ........... YES
    Ponding Allowed ........ NO
    Water Quality .......... NO
  Infiltration Method ...... HORTON
  Flow Routing Method ...... DYNWAVE
  Surcharge Method ......... EXTRAN
  Starting Date ............ 01/27/2025 00:00:00
  Ending Date .............. 01/28/2025 00:00:00
  Antecedent Dry Days ...... 0.0
  Report Time Step ......... 00:01:00
  Wet Time Step ............ 00:05:00
  Dry Time Step ............ 00:05:00
  Routing Time Step ........ 5.00 sec
  Variable Time Step ....... YES
```

```
Maximum Trials ........... 8
Number of Threads ........ 8
Head Tolerance ........... 0.001500 m

**************************        Volume         Depth
Runoff Quantity Continuity     hectare-m            mm
**************************     ---------       -------
Total Precipitation ......         3.077        55.200
Evaporation Loss .........         0.000         0.000
Infiltration Loss ........         1.383        24.816
Surface Runoff ...........         1.060        19.019
Final Storage ............         0.636        11.411
Continuity Error (%) .....        -0.085

**************************        Volume        Volume
Flow Routing Continuity        hectare-m      10^6 ltr
**************************     ---------     ---------
Dry Weather Inflow .......         0.000         0.000
Wet Weather Inflow .......         1.059        10.590
Groundwater Inflow .......         0.000         0.000
RDII Inflow ..............         0.000         0.000
External Inflow ..........         0.000         0.000
External Outflow .........         0.690         6.899
Flooding Loss ............         0.000         0.000
Evaporation Loss .........         0.000         0.000
Exfiltration Loss ........         0.000         0.000
Initial Stored Volume ....         0.000         0.000
Final Stored Volume ......         0.414         4.141
Continuity Error (%) .....        -4.247

*************************
Highest Continuity Errors
*************************
Node J29 (100.00%)
Node J36 (100.00%)
Node J33 (99.86%)
Node J18 (91.17%)
Node J25 (85.35%)

***************************
Time-Step Critical Elements
***************************
Link C20 (50.74%)
Link C17 (4.09%)
Link C19 (3.56%)

********************************
Highest Flow Instability Indexes
********************************
Link C11_1 (1)
```

```
  ********************************
  Most Frequent Nonconverging Nodes
  ********************************
  Convergence obtained at all time steps.


  *************************
  Routing Time Step Summary
  *************************
  Minimum Time Step           :     0.15 sec
  Average Time Step           :     4.25 sec
  Maximum Time Step           :     5.00 sec
  % of Time in Steady State   :     0.00
  Average Iterations per Step :     2.00
  % of Steps Not Converging   :     0.00
  Time Step Frequencies       :
      5.000 -  3.155 sec      :    97.31 %
      3.155 -  1.991 sec      :     1.06 %
      1.991 -  1.256 sec      :     0.47 %
      1.256 -  0.792 sec      :     0.44 %
      0.792 -  0.500 sec      :     0.72 %


  ****************************
  Subcatchment Runoff Summary
  ****************************

  ---------------------------------------------------------------------------------
---------------------------------------------
                            Total      Total      Total      Total     Imperv
Perv      Total       Total     Peak  Runoff
                           Precip      Runon       Evap      Infil     Runoff
Runoff     Runoff      Runoff   Runoff   Coeff
  Subcatchment                 mm         mm         mm         mm         mm
mm         mm    10^6 ltr      CMS
  ---------------------------------------------------------------------------------
---------------------------------------------
  101                       55.20       0.00       0.00       6.50      42.99
2.98      45.98        1.15     0.32   0.833
  102                       55.20       0.00       0.00       7.53      41.39
3.48      44.87        0.93     0.27   0.813
  103                       55.20       0.00       0.00       8.22      40.32
3.74      44.06        0.92     0.26   0.798
  104                       55.20       0.00       0.00       9.33      38.65
4.24      42.90        0.93     0.27   0.777
  105                       55.20       0.00       0.00      16.51      26.58
7.85      34.43        1.19     0.29   0.624
  106                       55.20       0.00       0.00      25.73      10.09
14.96      25.05        0.13     0.04   0.454
  107                       55.20       0.00       0.00      24.44      12.01
14.53      26.54        0.11     0.04   0.481
  108                       55.20       0.00       0.00      24.39      10.65
15.77      26.43        0.16     0.05   0.479
  109                       55.20       0.00       0.00      23.04      12.92
15.11      28.02        0.13     0.04   0.508
  110                       55.20       0.00       0.00      26.53      11.91
12.52      24.42        0.07     0.02   0.442
  111                       55.20       0.00       0.00      25.25      13.91
12.00      25.92        0.05     0.02   0.470
```

```
  112                       55.20       0.00       0.00      24.81      13.26
13.05      26.31        0.10     0.03   0.477
  113                       55.20       0.00       0.00      24.25      13.83
13.08      26.91        0.09     0.03   0.488
  EXT-1                     55.20       0.00       0.00      32.40       2.68
14.15      16.83        0.09     0.01   0.305
  EXT-2                     55.20       0.00       0.00      32.40       2.68
14.44      17.12        0.06     0.01   0.310
  EXT-3                     55.20       0.00       0.00      31.92       2.68
8.81      11.48        0.55     0.05   0.208
  EXT-4                     55.20       0.00       0.00      27.31       2.67
9.54      12.22        1.51     0.13   0.221
  EXT-5                     55.20       0.00       0.00      28.39       2.70
6.69       9.38        1.18     0.12   0.170
  EXT-6                     55.20       0.00       0.00      32.40       2.68
12.92      15.60        0.17     0.01   0.283
  EXT-7                     55.20       0.00       0.00      31.07       4.15
8.54      12.70        1.08     0.13   0.230


  ******************
  Node Depth Summary
  ******************
```

Node	Type	Average Depth Meters	Maximum Depth Meters	Maximum HGL Meters	Time of Max Occurrence days hr:min	Reported Max Depth Meters
J1	JUNCTION	0.04	0.24	82.35	0 11:57	0.24
J10	JUNCTION	0.03	0.13	84.08	0 12:00	0.13
J11	JUNCTION	0.29	0.57	84.05	0 17:53	0.57
J12	JUNCTION	0.01	0.08	82.08	1 00:00	0.08
J13	JUNCTION	0.03	0.18	84.04	0 12:00	0.18
J14	JUNCTION	0.15	0.30	82.40	0 12:04	0.30
J15	JUNCTION	0.01	0.06	83.08	0 12:04	0.06
J16	JUNCTION	0.03	0.08	82.62	1 00:00	0.08
J17	JUNCTION	0.01	0.21	81.98	1 00:00	0.21
J18	JUNCTION	0.14	0.31	84.05	0 17:52	0.31
J19	JUNCTION	0.77	1.27	84.05	0 17:55	1.27
J2	JUNCTION	0.06	0.39	81.82	0 11:58	0.39
J20	JUNCTION	0.14	0.66	83.44	0 23:59	0.66
J21	JUNCTION	0.66	1.22	83.47	0 18:14	1.22
J22	JUNCTION	0.08	0.27	82.51	0 12:01	0.27
J23	JUNCTION	0.34	1.23	83.44	0 23:58	1.23
J24	JUNCTION	0.00	0.03	82.24	0 23:59	0.03
J25	JUNCTION	0.57	1.19	83.43	0 22:30	1.19
J26	JUNCTION	0.08	0.27	82.51	0 12:01	0.27
J27	JUNCTION	0.78	1.27	83.46	0 12:51	1.27
J28	JUNCTION	0.09	0.21	82.40	0 12:04	0.21
J29	JUNCTION	0.19	0.39	82.58	1 00:00	0.39
J3	JUNCTION	0.08	0.36	80.96	0 12:02	0.36
J30	JUNCTION	0.09	0.21	82.40	0 12:04	0.21
J31	JUNCTION	0.15	0.28	83.08	0 12:02	0.28
J32	JUNCTION	0.00	0.00	82.80	0 00:00	0.00
J33	JUNCTION	0.23	0.43	82.62	1 00:00	0.43
J34	JUNCTION	0.00	0.00	82.19	0 00:00	0.00
J35	JUNCTION	0.00	0.00	81.88	0 00:00	0.00

J36	JUNCTION	0.01	0.10	81.98	1	00:00	0.10
J4	JUNCTION	0.19	0.34	84.08	0	12:01	0.34
J5	JUNCTION	0.04	0.24	82.53	0	11:57	0.24
J6	JUNCTION	0.06	0.37	81.89	0	11:58	0.37
J7	JUNCTION	0.07	0.34	80.98	0	12:03	0.34
J8	JUNCTION	0.02	0.09	83.95	0	12:00	0.09
J9	JUNCTION	0.16	0.37	82.51	0	12:01	0.37
BerryMunDrain	OUTFALL	0.13	0.22	82.28	0	12:04	0.22
CrowderMunDrain	OUTFALL	0.00	0.00	80.00	0	00:00	0.00
FergusonMunDrain	OUTFALL	0.00	0.08	81.93	1	00:00	0.08
SU1	STORAGE	0.33	0.88	80.88	0	12:57	0.88

****
Node Inflow Summary
****

Node	Type	Maximum Lateral Inflow CMS	Maximum Total Inflow CMS	Time of Max Occurrence days	hr:min	Lateral Inflow Volume 10^6 ltr	Total Inflow Volume 10^6 ltr	Flow Balance Error Percent
J1	JUNCTION	0.256	0.256	0	11:54	0.918	0.918	0.123
J10	JUNCTION	0.201	0.201	0	11:54	1.58	1.59	0.648
J11	JUNCTION	0.167	0.167	0	11:54	1.18	1.19	23.869
J12	JUNCTION	0.000	0.015	0	23:59	0	0.0699	4.049
J13	JUNCTION	0.329	0.329	0	11:54	1.3	1.3	-0.802
J14	JUNCTION	0.000	0.095	0	12:00	0	2.92	0.408
J15	JUNCTION	0.061	0.061	0	11:54	0.179	0.187	0.312
J16	JUNCTION	0.033	0.033	0	11:54	0.0939	0.094	23.486
J17	JUNCTION	0.000	0.015	1	00:00	0	0.0672	12.153
J18	JUNCTION	0.000	0.010	0	12:28	0	0.0437	1032.502
J19	JUNCTION	0.000	0.150	0	11:57	0	0.918	68.928
J2	JUNCTION	0.332	0.578	0	11:56	1.24	2.16	0.049
J20	JUNCTION	0.000	0.021	0	17:55	0	0.531	41.453
J21	JUNCTION	0.000	0.168	0	12:00	0	1.54	118.969
J22	JUNCTION	0.000	0.028	0	18:14	0	0.714	0.465

```
  J23                  JUNCTION     0.000    0.021     0  17:30           0
0.376     429.956
  J24                  JUNCTION     0.000    0.015     0  23:58           0
0.0709       1.432
  J25                  JUNCTION     0.000    0.086     0  12:00           0
0.748     582.817
  J26                  JUNCTION     0.000    0.012     0  11:54           0
0.121       3.308
  J27                  JUNCTION     0.000    0.312     0  12:00           0
1.31     112.120
  J28                  JUNCTION     0.000    0.048     0  12:51           0
0.622       0.553
  J29                  JUNCTION     0.000    0.031     0  12:04           0
0.158  158047.508 ltr
  J3                   JUNCTION     0.000    0.596     0  12:00           0
2.16      -0.005
  J30                  JUNCTION     0.000    0.005     0  11:53           0
0.00917      59.094
  J31                  JUNCTION     0.000    0.026     0  12:00           0
0.028     265.937
  J32                  JUNCTION     0.000    0.000     0  00:00           0
0       0.000 ltr
  J33                  JUNCTION     0.000    0.027     0  12:01           0
0.0761   72905.373
  J34                  JUNCTION     0.000    0.000     0  00:00           0
0       0.000 ltr
  J35                  JUNCTION     0.000    0.000     0  00:00           0
0       0.000 ltr
  J36                  JUNCTION     0.000    0.005     0  22:39           0
0.00354    3535.817 ltr
  J4                   JUNCTION     0.000    0.017     0  11:54           0
0.0323     188.191
  J5                   JUNCTION     0.267    0.267     0  11:54       0.927
0.927       0.129
  J6                   JUNCTION     0.267    0.518     0  11:56       0.926
1.85       0.084
  J7                   JUNCTION     0.000    0.530     0  12:00           0
1.85      -0.077
  J8                   JUNCTION     0.096    0.096     0  11:54        0.75
0.75       0.316
  J9                   JUNCTION     0.129    0.129     0  11:54         1.5
2.33       0.548
  BerryMunDrain        OUTFALL      0.000    0.083     0  12:04           0
2.9       0.000
  CrowderMunDrain      OUTFALL      0.000    0.122     0  12:57           0
3.95       0.000
  FergusonMunDrain     OUTFALL      0.000    0.015     1  00:00           0
0.0564       0.000
  SU1                  STORAGE      0.000    1.072     0  12:02           0
4.01       1.069


  **********************
  Node Surcharge Summary
  **********************

  No nodes were surcharged.
```

```
  **********************
  Node Flooding Summary
  **********************

  No nodes were flooded.


  **********************
  Storage Volume Summary
  **********************

  -------------------------------------------------------------------------------
---------------
                          Average    Avg   Evap  Exfil     Maximum    Max    Time of
Max    Maximum
                           Volume   Pcnt   Pcnt   Pcnt      Volume   Pcnt
Occurrence    Outflow
  Storage Unit            1000 m³   Full   Loss   Loss     1000 m³   Full    days
hr:min        CMS
  -------------------------------------------------------------------------------
---------------
  SU1                       0.284    2.1    0.0    0.0       1.155    8.6       0
12:57      0.122


  ************************
  Outfall Loading Summary
  ************************

  ------------------------------------------------------------
                        Flow       Avg       Max       Total
                        Freq      Flow      Flow      Volume
  Outfall Node          Pcnt       CMS       CMS    10^6 ltr
  ------------------------------------------------------------
  BerryMunDrain        88.62     0.043     0.083       2.897
  CrowderMunDrain      87.67     0.057     0.122       3.946
  FergusonMunDrain      6.20     0.012     0.015       0.056
  ------------------------------------------------------------
  System               60.83     0.113     0.198       6.899


  ********************
  Link Flow Summary
  ********************

  ---------------------------------------------------------------------------
                                Maximum  Time of Max   Maximum    Max/    Max/
                                 |Flow|   Occurrence   |Veloc|    Full    Full
  Link                 Type        CMS  days hr:min     m/sec    Flow   Depth
  ---------------------------------------------------------------------------
  C1                   CONDUIT     0.250     0  11:57      0.42    0.05    0.31
  C10_1                CONDUIT     0.017     0  11:54      0.05    0.00    0.16
  C10_2                CONDUIT     0.010     0  12:28      0.03    0.00    0.30
  C11_1                CONDUIT     0.150     0  11:57      0.10    0.01    0.62
  C11_3                CONDUIT     0.021     0  17:30      0.16    0.00    0.63
  C11_4                CONDUIT     0.015     0  23:59      0.13    0.00    0.04
  C12_1                CONDUIT     0.312     0  12:00      0.17    0.01    0.45
```

C12_2	CONDUIT	0.047	0	12:52	0.08	0.00	0.17
C13_1	CONDUIT	0.031	0	12:04	0.18	0.00	0.13
C13_2	CONDUIT	0.005	0	11:53	0.01	0.00	0.17
C14_1	CONDUIT	0.026	0	12:00	0.07	0.00	0.11
C14_2	CONDUIT	0.000	0	00:00	0.00	0.00	0.03
C15_1	CONDUIT	0.027	0	12:01	0.10	0.00	0.17
C15_3	CONDUIT	0.000	0	00:00	0.00	0.00	0.00
C15_4	CONDUIT	0.005	0	22:39	0.04	0.00	0.10
C17	CONDUIT	0.015	1	00:00	1.00	0.16	0.27
C19	CONDUIT	0.095	0	12:00	1.36	1.80	1.00
C2	CONDUIT	0.596	0	12:00	0.77	0.11	0.37
C20	CONDUIT	0.083	0	12:04	1.28	1.57	0.87
C3	CONDUIT	0.570	0	12:02	0.52	0.11	0.58
C4	CONDUIT	0.257	0	11:57	0.45	0.05	0.31
C5	CONDUIT	0.530	0	12:00	0.75	0.10	0.35
C6	CONDUIT	0.502	0	12:03	0.46	0.09	0.56
C7	CONDUIT	0.015	1	00:00	1.03	0.14	0.26
C8	CONDUIT	0.086	0	12:00	0.17	0.00	0.41
C8_2	CONDUIT	0.012	0	11:54	0.02	0.00	0.21
C9_1	CONDUIT	0.168	0	12:00	0.21	0.01	0.42
C9_2	CONDUIT	0.028	0	18:17	0.05	0.00	0.21
C16	ORIFICE	0.122	0	12:57			1.00
W1	WEIR	0.000	0	00:00			0.00
W10	WEIR	0.000	0	00:00			0.00
W2	WEIR	0.021	0	17:55			0.27
W3	WEIR	0.028	0	18:14			0.33
W4	WEIR	0.015	0	23:58			0.22
W5	WEIR	0.010	0	22:30			0.17
W6	WEIR	0.048	0	12:51			0.29
W7	WEIR	0.000	0	00:00			0.00
W8	WEIR	0.000	0	00:00			0.00
W9	WEIR	0.000	0	00:00			0.00

****
Flow Classification Summary
****

Conduit	Adjusted /Actual Length	Dry	Up Dry	Down Dry	Sub Crit	Sup Crit	Up Crit	Down Crit	Norm Ltd	Inlet Ctrl
		---------- Fraction of Time in Flow Class -------								
C1	1.00	0.10	0.00	0.00	0.89	0.00	0.00	0.00	0.88	0.00
C10_1	1.00	0.10	0.00	0.00	0.90	0.00	0.00	0.00	0.21	0.00
C10_2	1.00	0.00	0.52	0.00	0.48	0.00	0.00	0.00	0.00	0.00
C11_1	1.00	0.00	0.00	0.00	1.00	0.00	0.00	0.00	0.43	0.00
C11_3	1.00	0.64	0.00	0.00	0.36	0.00	0.00	0.00	0.07	0.00

C11_4	1.00	0.93	0.00	0.00	0.07	0.00	0.00	0.00	0.07
0.00									
C12_1	1.00	0.10	0.00	0.00	0.90	0.00	0.00	0.00	0.85
0.00									
C12_2	1.00	0.11	0.37	0.00	0.52	0.00	0.00	0.00	0.00
0.00									
C13_1	1.00	0.10	0.00	0.00	0.90	0.00	0.00	0.00	0.78
0.00									
C13_2	1.00	0.11	0.37	0.00	0.52	0.00	0.00	0.00	0.00
0.00									
C14_1	1.00	0.10	0.00	0.00	0.90	0.00	0.00	0.00	0.34
0.00									
C14_2	1.00	0.10	0.90	0.00	0.00	0.00	0.00	0.00	0.00
0.00									
C15_1	1.00	0.10	0.00	0.00	0.90	0.00	0.00	0.00	0.39
0.00									
C15_3	1.00	1.00	0.00	0.00	0.00	0.00	0.00	0.00	0.00
0.00									
C15_4	1.00	0.93	0.01	0.00	0.06	0.00	0.00	0.00	0.00
0.00									
C17	1.00	0.95	0.00	0.00	0.00	0.05	0.00	0.00	0.00
0.00									
C19	1.00	0.10	0.00	0.00	0.88	0.02	0.00	0.00	0.23
0.00									
C2	1.00	0.10	0.00	0.00	0.90	0.00	0.00	0.00	0.50
0.00									
C20	1.00	0.11	0.00	0.00	0.89	0.00	0.00	0.00	0.00
0.00									
C3	1.00	0.12	0.00	0.00	0.88	0.00	0.00	0.00	0.66
0.00									
C4	1.00	0.10	0.00	0.00	0.90	0.00	0.00	0.00	0.87
0.00									
C5	1.00	0.10	0.00	0.00	0.90	0.00	0.00	0.00	0.50
0.00									
C6	1.00	0.12	0.00	0.00	0.88	0.00	0.00	0.00	0.68
0.00									
C7	1.00	0.93	0.00	0.00	0.00	0.04	0.00	0.03	0.00
0.00									
C8	1.00	0.10	0.00	0.00	0.90	0.00	0.00	0.00	0.84
0.00									
C8_2	1.00	0.10	0.38	0.00	0.52	0.00	0.00	0.00	0.00
0.00									
C9_1	1.00	0.10	0.00	0.00	0.90	0.00	0.00	0.00	0.83
0.00									
C9_2	1.00	0.10	0.38	0.00	0.52	0.00	0.00	0.00	0.00
0.00									

****
Conduit Surcharge Summary
****

Conduit	Hours Full: Both Ends	Hours Full: Upstream	Hours Full: Dnstream	Hours Above Full Normal Flow	Hours Capacity Limited
C19	0.01	0.26	0.01	7.60	0.01
C20	0.01	0.01	0.01	10.72	0.01

```
Analysis begun on:  Fri Feb 21 11:56:33 2025
Analysis ended on:  Fri Feb 21 11:56:33 2025
Total elapsed time: < 1 sec
```

5 yr - SCS Type II 24 hr storm

```
  EPA STORM WATER MANAGEMENT MODEL - VERSION 5.2 (Build 5.2.4)
  ------------------------------------------------------------


  *************
  Element Count
  *************
  Number of rain gages ...... 8
  Number of subcatchments ... 20
  Number of nodes ........... 40
  Number of links ........... 39
  Number of pollutants ...... 0
  Number of land uses ....... 0


  ****************
  Raingage Summary
  ****************
                                                        Data       Recording
  Name                  Data Source                     Type       Interval
  ---------------------------------------------------------------------------
  100yr_SCS_Type_II_12hr 100yr_SCS_Type_II_12hr          INTENSITY    6 min.
  100yr_SCS_Type_II_24hr 100yr_SCS_Type_II_24hr          INTENSITY    6 min.
  10yr_SCS_Type_II_24hr 10yr_SCS_Type_II_24hr           INTENSITY    6 min.
  25mm_WQ_Chicago_4h   25mm_WQ_Chicago_4h               INTENSITY   10 min.
  25yr_SCS_Type_II_24hr 25yr_SCS_Type_II_24hr           INTENSITY    6 min.
  2yr_SCS_Type_II_24hr 2yr_SCS_Type_II_24hr            INTENSITY    6 min.
  50yr_SCS_Type_II_24hr 50yr_SCS_Type_II_24hr           INTENSITY    6 min.
  5yr_SCS_Type_II_24hr 5yr_SCS_Type_II_24hr            INTENSITY    6 min.


  ********************
  Subcatchment Summary
  ********************
  Name                        Area     Width   %Imperv    %Slope Rain Gage
Outlet
  ---------------------------------------------------------------------------------
---------------------------
  101                         2.50    188.38     80.94    1.0000
5yr_SCS_Type_II_24hr J2
  102                         2.06    168.48     77.85    1.0000
5yr_SCS_Type_II_24hr J6
  103                         2.08    152.14     75.89    1.0000
5yr_SCS_Type_II_24hr J1
  104                         2.16    180.69     72.65    1.0000
5yr_SCS_Type_II_24hr J5
  105                         3.45    193.41     49.97    1.0000
5yr_SCS_Type_II_24hr J13
  106                         0.54    438.19     18.82    1.0000
5yr_SCS_Type_II_24hr J8
  107                         0.42    460.87     22.40    1.0000
5yr_SCS_Type_II_24hr J13
  108                         0.60    492.86     19.87    1.0000
5yr_SCS_Type_II_24hr J10
  109                         0.45    530.52     24.09    1.0000
5yr_SCS_Type_II_24hr J15
  110                         0.27    265.20     22.21    1.0000
5yr_SCS_Type_II_24hr J10
```

111	0.21	313.72	25.95	1.0000	5yr_SCS_Type_II_24hr J15
112	0.37	548.02	24.74	1.0000	5yr_SCS_Type_II_24hr J11
113	0.35	523.97	25.80	1.0000	5yr_SCS_Type_II_24hr J16
EXT-1	0.56	70.08	5.00	1.1380	5yr_SCS_Type_II_24hr J2
EXT-2	0.36	57.70	5.00	1.3800	5yr_SCS_Type_II_24hr J8
EXT-3	4.83	135.00	5.00	0.2270	5yr_SCS_Type_II_24hr J8
EXT-4	12.34	211.38	5.00	0.2040	5yr_SCS_Type_II_24hr J9
EXT-5	12.58	219.50	5.05	0.0810	5yr_SCS_Type_II_24hr J10
EXT-6	1.12	91.50	5.00	0.4810	5yr_SCS_Type_II_24hr J10
EXT-7	8.50	225.46	7.72	0.2430	5yr_SCS_Type_II_24hr J11

****
Node Summary
****

Name	Type	Invert Elev.	Max. Depth	Ponded Area	External Inflow
J1	JUNCTION	82.11	1.00	0.0	
J10	JUNCTION	83.94	1.50	0.0	
J11	JUNCTION	83.48	1.50	0.0	
J12	JUNCTION	82.00	1.50	0.0	
J13	JUNCTION	83.86	1.50	0.0	
J14	JUNCTION	82.10	1.50	0.0	
J15	JUNCTION	83.02	1.50	0.0	
J16	JUNCTION	82.54	1.50	0.0	
J17	JUNCTION	81.77	1.50	0.0	
J18	JUNCTION	83.74	1.50	0.0	
J19	JUNCTION	82.78	1.50	0.0	
J2	JUNCTION	81.44	1.00	0.0	
J20	JUNCTION	82.78	1.50	0.0	
J21	JUNCTION	82.24	1.50	0.0	
J22	JUNCTION	82.24	1.50	0.0	
J23	JUNCTION	82.21	1.50	0.0	
J24	JUNCTION	82.21	1.50	0.0	
J25	JUNCTION	82.24	1.50	0.0	
J26	JUNCTION	82.24	1.50	0.0	
J27	JUNCTION	82.18	1.50	0.0	
J28	JUNCTION	82.18	1.50	0.0	
J29	JUNCTION	82.19	1.50	0.0	
J3	JUNCTION	80.60	1.00	0.0	
J30	JUNCTION	82.19	1.50	0.0	
J31	JUNCTION	82.80	1.50	0.0	
J32	JUNCTION	82.80	1.50	0.0	
J33	JUNCTION	82.19	1.50	0.0	
J34	JUNCTION	82.19	1.50	0.0	
J35	JUNCTION	81.88	1.50	0.0	
J36	JUNCTION	81.88	1.50	0.0	

J4	JUNCTION	83.74	1.50	0.0
J5	JUNCTION	82.29	1.00	0.0
J6	JUNCTION	81.52	1.00	0.0
J7	JUNCTION	80.64	1.00	0.0
J8	JUNCTION	83.86	1.50	0.0
J9	JUNCTION	82.14	1.50	0.0
BerryMunDrain	OUTFALL	82.06	0.30	0.0
CrowderMunDrain	OUTFALL	80.00	0.00	0.0
FergusonMunDrain	OUTFALL	81.85	0.30	0.0
SU1	STORAGE	80.00	3.00	0.0

****
Link Summary
****

Name	From Node	To Node	Type	Length	% Slope	Roughness
C1	J1	J2	CONDUIT	135.3	0.4997	0.0350
C10_1	J10	J4	CONDUIT	67.2	0.3006	0.0350
C10_2	J18	J11	CONDUIT	79.4	0.3275	0.0350
C11_1	J11	J19	CONDUIT	116.9	0.5997	0.0350
C11_3	J20	J23	CONDUIT	97.6	0.5820	0.0350
C11_4	J24	J12	CONDUIT	30.1	0.7019	0.0350
C12_1	J13	J27	CONDUIT	229.4	0.7307	0.0350
C12_2	J28	J14	CONDUIT	17.8	0.4891	0.0350
C13_1	J15	J29	CONDUIT	279.5	0.2966	0.0350
C13_2	J30	J14	CONDUIT	18.4	0.5011	0.0350
C14_1	J15	J31	CONDUIT	71.8	0.3007	0.0350
C14_2	J32	J16	CONDUIT	78.7	0.3278	0.0350
C15_1	J16	J33	CONDUIT	117.5	0.3003	0.0350
C15_3	J34	J35	CONDUIT	97.6	0.3216	0.0350
C15_4	J36	J17	CONDUIT	27.7	0.3748	0.0350
C17	J17	FergusonMunDrain	CONDUIT	8.4	0.5968	0.0100
C19	J9	J14	CONDUIT	13.7	0.2982	0.0130
C2	J2	J3	CONDUIT	168.2	0.5001	0.0350
C20	J14	BerryMunDrain	CONDUIT	13.2	0.3020	0.0130
C3	J3	SU1	CONDUIT	119.2	0.5001	0.0350

```
  C4                J5                J6                CONDUIT          153.8
0.5001    0.0350
  C5                J6                J7                CONDUIT          176.2
0.5001    0.0350
  C6                J7                SU1               CONDUIT          127.4
0.4999    0.0350
  C7                J12               J17               CONDUIT           13.9
0.7203    0.0100
  C8                J8                J25               CONDUIT          225.6
0.7186    0.0350
  C8_2              J26               J9                CONDUIT           20.1
0.5015    0.0350
  C9_1              J10               J21               CONDUIT          285.7
0.5946    0.0350
  C9_2              J22               J9                CONDUIT           17.6
0.5973    0.0350
  C16               SU1               CrowderMunDrain   ORIFICE
  W1                J4                J18               WEIR
  W10               J35               J36               WEIR
  W2                J19               J20               WEIR
  W3                J21               J22               WEIR
  W4                J23               J24               WEIR
  W5                J25               J26               WEIR
  W6                J27               J28               WEIR
  W7                J29               J30               WEIR
  W8                J31               J32               WEIR
  W9                J33               J34               WEIR


  *********************
  Cross Section Summary
  *********************
                                        Full     Full     Hyd.     Max.   No. of
Full
  Conduit           Shape               Depth     Area     Rad.    Width  Barrels
Flow
  ---------------------------------------------------------------------------------
------
  C1                TRAPEZOIDAL          1.00     4.00     0.55     7.00        1
5.40
  C10_1             TRAPEZOIDAL          1.50     9.75     0.85    11.00        1
13.69
  C10_2             TRAPEZOIDAL          1.50     9.75     0.85    11.00        1
14.29
  C11_1             TRAPEZOIDAL          1.50     9.75     0.85    11.00        1
19.34
  C11_3             TRAPEZOIDAL          1.50     9.75     0.85    11.00        1
19.05
  C11_4             TRAPEZOIDAL          1.50     9.75     0.85    11.00        1
20.93
  C12_1             TRAPEZOIDAL          1.50     9.75     0.85    11.00        1
21.35
  C12_2             TRAPEZOIDAL          1.50     9.75     0.85    11.00        1
17.47
  C13_1             TRAPEZOIDAL          1.50     9.75     0.85    11.00        1
13.60
  C13_2             TRAPEZOIDAL          1.50     9.75     0.85    11.00        1
17.68
  C14_1             TRAPEZOIDAL          1.50     9.75     0.85    11.00        1
13.70
```

```
  C14_2            TRAPEZOIDAL          1.50     9.75     0.85    11.00        1
14.30
  C15_1            TRAPEZOIDAL          1.50     9.75     0.85    11.00        1
13.69
  C15_3            TRAPEZOIDAL          1.50     9.75     0.85    11.00        1
14.17
  C15_4            TRAPEZOIDAL          1.50     9.75     0.85    11.00        1
15.29
  C17              CIRCULAR             0.30     0.07     0.07     0.30        1
0.10
  C19              CIRCULAR             0.30     0.07     0.07     0.30        1
0.05
  C2               TRAPEZOIDAL          1.00     4.00     0.55     7.00        1
5.40
  C20              CIRCULAR             0.30     0.07     0.07     0.30        1
0.05
  C3               TRAPEZOIDAL          1.00     4.00     0.55     7.00        1
5.40
  C4               TRAPEZOIDAL          1.00     4.00     0.55     7.00        1
5.40
  C5               TRAPEZOIDAL          1.00     4.00     0.55     7.00        1
5.40
  C6               TRAPEZOIDAL          1.00     4.00     0.55     7.00        1
5.40
  C7               CIRCULAR             0.30     0.07     0.07     0.30        1
0.11
  C8               TRAPEZOIDAL          1.50     9.75     0.85    11.00        1
21.17
  C8_2             TRAPEZOIDAL          1.50     9.75     0.85    11.00        1
17.69
  C9_1             TRAPEZOIDAL          1.50     9.75     0.85    11.00        1
19.26
  C9_2             TRAPEZOIDAL          1.50     9.75     0.85    11.00        1
19.30


  ****************
  Analysis Options
  ****************
  Flow Units ............... CMS
  Process Models:
    Rainfall/Runoff ........ YES
    RDII ................... NO
    Snowmelt ............... NO
    Groundwater ............ NO
    Flow Routing ........... YES
    Ponding Allowed ........ NO
    Water Quality .......... NO
  Infiltration Method ...... HORTON
  Flow Routing Method ...... DYNWAVE
  Surcharge Method ......... EXTRAN
  Starting Date ............ 01/27/2025 00:00:00
  Ending Date .............. 01/28/2025 00:00:00
  Antecedent Dry Days ...... 0.0
  Report Time Step ......... 00:01:00
  Wet Time Step ............ 00:05:00
  Dry Time Step ............ 00:05:00
  Routing Time Step ........ 5.00 sec
  Variable Time Step ....... YES
```

```
Maximum Trials ........... 8
Number of Threads ........ 8
Head Tolerance ........... 0.001500 m

**************************        Volume         Depth
Runoff Quantity Continuity     hectare-m            mm
**************************     ---------       -------
Total Precipitation ......         4.013        72.000
Evaporation Loss .........         0.000         0.000
Infiltration Loss ........         1.595        28.618
Surface Runoff ...........         1.644        29.496
Final Storage ............         0.778        13.956
Continuity Error (%) .....        -0.096

**************************        Volume        Volume
Flow Routing Continuity        hectare-m      10^6 ltr
**************************     ---------     ---------
Dry Weather Inflow .......         0.000         0.000
Wet Weather Inflow .......         1.642        16.425
Groundwater Inflow .......         0.000         0.000
RDII Inflow ..............         0.000         0.000
External Inflow ..........         0.000         0.000
External Outflow .........         1.243        12.428
Flooding Loss ............         0.000         0.000
Evaporation Loss .........         0.000         0.000
Exfiltration Loss ........         0.000         0.000
Initial Stored Volume ....         0.000         0.000
Final Stored Volume ......         0.447         4.466
Continuity Error (%) .....        -2.850

*************************
Highest Continuity Errors
*************************
Node J29 (100.00%)
Node J33 (96.15%)
Node J18 (86.72%)
Node J36 (76.69%)
Node J31 (66.29%)

***************************
Time-Step Critical Elements
***************************
Link C20 (66.73%)

********************************
Highest Flow Instability Indexes
********************************
All links are stable.

*********************************
Most Frequent Nonconverging Nodes
```

```
  **********************************
  Convergence obtained at all time steps.


  *************************
  Routing Time Step Summary
  *************************
  Minimum Time Step           :     0.05 sec
  Average Time Step           :     3.14 sec
  Maximum Time Step           :     5.00 sec
  % of Time in Steady State   :     0.00
  Average Iterations per Step :     2.00
  % of Steps Not Converging   :     0.00
  Time Step Frequencies       :
      5.000 -  3.155 sec      :    32.87 %
      3.155 -  1.991 sec      :    57.94 %
      1.991 -  1.256 sec      :     9.15 %
      1.256 -  0.792 sec      :     0.02 %
      0.792 -  0.500 sec      :     0.02 %


  ****************************
  Subcatchment Runoff Summary
  ****************************

  ---------------------------------------------------------------------------------
----------------------------------------------
                              Total      Total      Total      Total     Imperv
Perv      Total       Total     Peak  Runoff
                             Precip      Runon       Evap      Infil     Runoff
Runoff     Runoff      Runoff   Runoff   Coeff
  Subcatchment                 mm         mm         mm         mm         mm
mm         mm    10^6 ltr      CMS
  ---------------------------------------------------------------------------------
----------------------------------------------
  101                         72.00       0.00       0.00       7.59      56.54
5.06      61.60        1.54     0.46   0.856
  102                         72.00       0.00       0.00       8.79      54.43
5.89      60.33        1.25     0.37   0.838
  103                         72.00       0.00       0.00       9.61      53.03
6.35      59.38        1.24     0.36   0.825
  104                         72.00       0.00       0.00      10.90      50.83
7.20      58.03        1.25     0.38   0.806
  105                         72.00       0.00       0.00      19.19      34.96
13.37      48.32        1.67     0.42   0.671
  106                         72.00       0.00       0.00      29.71      13.25
24.54      37.79        0.20     0.07   0.525
  107                         72.00       0.00       0.00      28.20      15.77
23.76      39.53        0.16     0.06   0.549
  108                         72.00       0.00       0.00      27.99      13.99
25.56      39.55        0.24     0.08   0.549
  109                         72.00       0.00       0.00      26.43      16.96
24.41      41.37        0.18     0.07   0.575
  110                         72.00       0.00       0.00      31.00      15.64
21.07      36.70        0.10     0.03   0.510
  111                         72.00       0.00       0.00      29.51      18.29
20.16      38.45        0.08     0.03   0.534
  112                         72.00       0.00       0.00      28.83      17.43
21.64      39.08        0.15     0.06   0.543
```

```
  113                       72.00       0.00       0.00      28.14      18.19
21.62      39.80        0.14     0.05   0.553
  EXT-1                     72.00       0.00       0.00      37.86       3.52
24.31      27.83        0.15     0.02   0.387
  EXT-2                     72.00       0.00       0.00      37.86       3.52
24.67      28.19        0.10     0.02   0.391
  EXT-3                     72.00       0.00       0.00      37.20       3.52
17.23      20.75        1.00     0.07   0.288
  EXT-4                     72.00       0.00       0.00      31.09       3.52
18.12      21.63        2.67     0.18   0.300
  EXT-5                     72.00       0.00       0.00      32.50       3.54
13.44      16.99        2.14     0.17   0.236
  EXT-6                     72.00       0.00       0.00      37.86       3.52
22.83      26.35        0.29     0.03   0.366
  EXT-7                     72.00       0.00       0.00      36.22       5.45
16.72      22.17        1.89     0.19   0.308


  ******************
  Node Depth Summary
  ******************
```

Node	Type	Average Depth Meters	Maximum Depth Meters	Maximum HGL Meters	Time of Max Occurrence days hr:min	Reported Max Depth Meters
J1	JUNCTION	0.04	0.28	82.40	0 11:56	0.28
J10	JUNCTION	0.05	0.18	84.12	0 12:00	0.17
J11	JUNCTION	0.40	0.61	84.09	0 14:53	0.61
J12	JUNCTION	0.05	0.13	82.13	0 17:24	0.13
J13	JUNCTION	0.03	0.22	84.08	0 11:58	0.22
J14	JUNCTION	0.37	0.70	82.80	0 12:35	0.70
J15	JUNCTION	0.01	0.10	83.11	0 12:01	0.10
J16	JUNCTION	0.09	0.16	82.70	1 00:00	0.16
J17	JUNCTION	0.11	0.26	82.03	0 17:26	0.26
J18	JUNCTION	0.22	0.35	84.09	0 14:52	0.35
J19	JUNCTION	0.95	1.31	84.09	0 14:55	1.31
J2	JUNCTION	0.07	0.45	81.89	0 11:57	0.45
J20	JUNCTION	0.36	0.70	83.48	0 17:20	0.70
J21	JUNCTION	0.87	1.26	83.51	0 14:57	1.26
J22	JUNCTION	0.40	0.75	83.00	0 16:33	0.75
J23	JUNCTION	0.70	1.27	83.48	0 17:21	1.27
J24	JUNCTION	0.02	0.06	82.27	0 17:21	0.06
J25	JUNCTION	0.81	1.22	83.46	0 16:23	1.22
J26	JUNCTION	0.40	0.76	83.00	0 16:33	0.76
J27	JUNCTION	0.93	1.35	83.54	0 12:16	1.35
J28	JUNCTION	0.30	0.62	82.80	0 12:35	0.62
J29	JUNCTION	0.32	0.54	82.72	1 00:00	0.54
J3	JUNCTION	0.16	0.45	81.04	0 13:10	0.45
J30	JUNCTION	0.29	0.61	82.80	0 12:35	0.61
J31	JUNCTION	0.18	0.31	83.11	0 12:02	0.31
J32	JUNCTION	0.00	0.00	82.80	0 00:00	0.00
J33	JUNCTION	0.34	0.51	82.70	1 00:00	0.51
J34	JUNCTION	0.00	0.00	82.19	0 00:00	0.00
J35	JUNCTION	0.00	0.00	81.88	0 00:00	0.00
J36	JUNCTION	0.06	0.16	82.03	0 17:26	0.16
J4	JUNCTION	0.23	0.38	84.12	0 12:01	0.38

```
  J5                   JUNCTION     0.04     0.29    82.58     0  11:56        0.29
  J6                   JUNCTION     0.06     0.43    81.95     0  11:57        0.43
  J7                   JUNCTION     0.14     0.41    81.04     0  13:09        0.41
  J8                   JUNCTION     0.03     0.12    83.98     0  12:00        0.12
  J9                   JUNCTION     0.48     0.86    83.00     0  16:33        0.86
  BerryMunDrain        OUTFALL      0.20     0.30    82.36     0  12:21        0.30
  CrowderMunDrain      OUTFALL      0.00     0.00    80.00     0  00:00        0.00
  FergusonMunDrain     OUTFALL      0.05     0.13    81.98     0  17:26        0.13
  SU1                  STORAGE      0.53     1.04    81.04     0  13:10        1.04


  *******************
  Node Inflow Summary
  *******************

  -------------------------------------------------------------------------------
----------------
                                   Maximum  Maximum                  Lateral
Total        Flow
                                   Lateral    Total  Time of Max      Inflow
Inflow     Balance
                                    Inflow   Inflow   Occurrence      Volume
Volume       Error
  Node                 Type           CMS      CMS  days hr:min    10^6 ltr    10^6
ltr     Percent
  -------------------------------------------------------------------------------
----------------
  J1                   JUNCTION     0.360    0.360     0  11:54        1.24
1.24       0.107
  J10                  JUNCTION     0.311    0.311     0  11:54        2.76
2.78       0.471
  J11                  JUNCTION     0.244    0.244     0  11:54        2.03
2.03      13.317
  J12                  JUNCTION     0.000    0.040     0  17:21           0
0.891       0.408
  J13                  JUNCTION     0.477    0.477     0  11:54        1.83
1.83      -0.668
  J14                  JUNCTION     0.000    0.191     0  12:19           0
6.28       0.333
  J15                  JUNCTION     0.102    0.102     0  11:54       0.265
0.275      -0.382
  J16                  JUNCTION     0.054    0.054     0  11:54       0.139
0.143      40.791
  J17                  JUNCTION     0.000    0.040     0  17:22           0
0.889       0.937
  J18                  JUNCTION     0.000    0.031     0  12:00           0
0.0489     652.899
  J19                  JUNCTION     0.000    0.154     0  11:54           0
1.75      27.932
  J2                   JUNCTION     0.473    0.814     0  11:55         1.7
2.93      -0.091
  J20                  JUNCTION     0.000    0.047     0  14:55           0
1.37      13.306
  J21                  JUNCTION     0.000    0.265     0  12:00           0
2.73      47.133
  J22                  JUNCTION     0.000    0.059     0  14:57           0
1.88       0.536
  J23                  JUNCTION     0.000    0.044     0  14:10           0
1.2      34.982
```

```
  J24                  JUNCTION     0.000    0.040     0  17:21           0
0.893       0.150
  J25                  JUNCTION     0.000    0.143     0  12:00           0
1.3      99.853
  J26                  JUNCTION     0.000    0.027     0  16:23           0
0.686       1.717
  J27                  JUNCTION     0.000    0.448     0  11:58           0
1.84      60.888
  J28                  JUNCTION     0.000    0.167     0  12:16           0
1.15       0.637
  J29                  JUNCTION     0.000    0.065     0  12:01           0
0.245  245224.333 ltr
  J3                   JUNCTION     0.000    0.832     0  12:00           0
2.93       0.132
  J30                  JUNCTION     0.000    0.016     0  12:07           0
0.0265      39.170
  J31                  JUNCTION     0.000    0.033     0  11:53           0
0.0309     196.620
  J32                  JUNCTION     0.000    0.000     0  00:00           0
0       0.000 ltr
  J33                  JUNCTION     0.000    0.045     0  12:00           0
0.101    2500.309
  J34                  JUNCTION     0.000    0.000     0  00:00           0
0       0.000 ltr
  J35                  JUNCTION     0.000    0.000     0  00:00           0
0       0.000 ltr
  J36                  JUNCTION     0.000    0.009     0  16:20           0
0.00576     329.060
  J4                   JUNCTION     0.000    0.023     0  11:53           0
0.0377     152.563
  J5                   JUNCTION     0.376    0.376     0  11:54        1.25
1.25       0.116
  J6                   JUNCTION     0.375    0.725     0  11:55        1.25
2.5      -0.076
  J7                   JUNCTION     0.000    0.738     0  12:00           0
2.5       0.078
  J8                   JUNCTION     0.155    0.155     0  11:54        1.31
1.31       0.071
  J9                   JUNCTION     0.184    0.184     0  11:54        2.66
5.2       0.549
  BerryMunDrain        OUTFALL      0.000    0.177     0  12:35           0
6.23       0.000
  CrowderMunDrain      OUTFALL      0.000    0.135     0  13:10           0
5.32       0.000
  FergusonMunDrain     OUTFALL      0.000    0.040     0  17:26           0
0.875       0.000
  SU1                  STORAGE      0.000    1.508     0  12:02           0
5.43       1.089


  **********************
  Node Surcharge Summary
  **********************

  No nodes were surcharged.


  *********************
  Node Flooding Summary
```

****

No nodes were flooded.

****
Storage Volume Summary
****

Storage Unit	Average Volume 1000 m³	Avg Pcnt Full	Evap Pcnt Loss	Exfil Pcnt Loss	Maximum Volume 1000 m³	Max Pcnt Full	Time of Max Occurrence days hr:min	Maximum Outflow CMS
SU1	0.614	4.6	0.0	0.0	1.626	12.1	0 13:10	0.135

****
Outfall Loading Summary
****

Outfall Node	Flow Freq Pcnt	Avg Flow CMS	Max Flow CMS	Total Volume 10^6 ltr
BerryMunDrain	93.21	0.105	0.177	6.229
CrowderMunDrain	92.54	0.084	0.135	5.323
FergusonMunDrain	43.30	0.032	0.040	0.875
System	76.35	0.221	0.318	12.428

****
Link Flow Summary
****

Link	Type	Maximum |Flow| CMS	Time of Max Occurrence days hr:min	Maximum |Veloc| m/sec	Max/ Full Flow	Max/ Full Depth
C1	CONDUIT	0.350	0 11:56	0.46	0.06	0.37
C10_1	CONDUIT	0.023	0 11:53	0.06	0.00	0.18
C10_2	CONDUIT	0.031	0 12:00	0.08	0.00	0.32
C11_1	CONDUIT	0.154	0 11:54	0.08	0.01	0.64
C11_3	CONDUIT	0.044	0 14:10	0.22	0.00	0.66
C11_4	CONDUIT	0.040	0 17:21	0.19	0.00	0.06
C12_1	CONDUIT	0.448	0 11:58	0.18	0.02	0.50
C12_2	CONDUIT	0.158	0 12:17	0.08	0.01	0.44
C13_1	CONDUIT	0.065	0 12:01	0.24	0.00	0.18

C13_2	CONDUIT	0.016	0	12:07	0.02	0.00	0.44
C14_1	CONDUIT	0.033	0	11:53	0.08	0.00	0.14
C14_2	CONDUIT	0.000	0	00:00	0.00	0.00	0.05
C15_1	CONDUIT	0.045	0	12:00	0.12	0.00	0.22
C15_3	CONDUIT	0.000	0	00:00	0.00	0.00	0.00
C15_4	CONDUIT	0.009	0	16:20	0.06	0.00	0.14
C17	CONDUIT	0.040	0	17:26	1.31	0.41	0.45
C19	CONDUIT	0.142	0	16:36	2.01	2.69	1.00
C2	CONDUIT	0.832	0	12:00	0.84	0.15	0.43
C20	CONDUIT	0.177	0	12:35	2.51	3.33	1.00
C3	CONDUIT	0.803	0	12:02	0.56	0.15	0.72
C4	CONDUIT	0.361	0	11:56	0.50	0.07	0.36
C5	CONDUIT	0.738	0	12:00	0.81	0.14	0.41
C6	CONDUIT	0.705	0	12:02	0.49	0.13	0.70
C7	CONDUIT	0.040	0	17:22	1.35	0.38	0.44
C8	CONDUIT	0.143	0	12:00	0.20	0.01	0.42
C8_2	CONDUIT	0.027	0	16:46	0.02	0.00	0.54
C9_1	CONDUIT	0.265	0	12:00	0.23	0.01	0.45
C9_2	CONDUIT	0.059	0	14:54	0.03	0.00	0.54
C16	ORIFICE	0.135	0	13:10			1.00
W1	WEIR	0.000	0	00:00			0.00
W10	WEIR	0.000	0	00:00			0.00
W2	WEIR	0.047	0	14:55			0.47
W3	WEIR	0.059	0	14:57			0.54
W4	WEIR	0.040	0	17:21			0.42
W5	WEIR	0.027	0	16:23			0.32
W6	WEIR	0.167	0	12:16			0.68
W7	WEIR	0.000	0	00:00			0.00
W8	WEIR	0.000	0	00:00			0.00
W9	WEIR	0.000	0	00:00			0.00

****
Flow Classification Summary
****

Conduit	Adjusted /Actual Length	Fraction of Time in Flow Class: Dry	Up Dry	Down Dry	Sub Crit	Sup Crit	Up Crit	Down Crit	Norm Ltd	Inlet Ctrl
C1	1.00	0.08	0.00	0.00	0.92	0.00	0.00	0.00	0.90	0.00
C10_1	1.00	0.08	0.00	0.00	0.92	0.00	0.00	0.00	0.18	0.00
C10_2	1.00	0.00	0.50	0.00	0.50	0.00	0.00	0.00	0.00	0.00
C11_1	1.00	0.00	0.00	0.00	1.00	0.00	0.00	0.00	0.43	0.00
C11_3	1.00	0.54	0.00	0.00	0.46	0.00	0.00	0.00	0.04	0.00
C11_4	1.00	0.67	0.00	0.00	0.33	0.00	0.00	0.00	0.33	0.00

C12_1	1.00	0.08	0.00	0.00	0.92	0.00	0.00	0.00	0.88
0.00									
C12_2	1.00	0.09	0.38	0.00	0.53	0.00	0.00	0.00	0.00
0.00									
C13_1	1.00	0.08	0.00	0.00	0.92	0.00	0.00	0.00	0.81
0.00									
C13_2	1.00	0.09	0.39	0.00	0.52	0.00	0.00	0.00	0.00
0.00									
C14_1	1.00	0.08	0.00	0.00	0.92	0.00	0.00	0.00	0.37
0.00									
C14_2	1.00	0.08	0.92	0.00	0.00	0.00	0.00	0.00	0.00
0.00									
C15_1	1.00	0.08	0.00	0.00	0.92	0.00	0.00	0.00	0.37
0.00									
C15_3	1.00	1.00	0.00	0.00	0.00	0.00	0.00	0.00	0.00
0.00									
C15_4	1.00	0.67	0.01	0.00	0.32	0.00	0.00	0.00	0.00
0.00									
C17	1.00	0.68	0.00	0.00	0.00	0.32	0.00	0.00	0.16
0.00									
C19	1.00	0.08	0.00	0.00	0.90	0.02	0.00	0.00	0.22
0.00									
C2	1.00	0.08	0.00	0.00	0.92	0.00	0.00	0.00	0.50
0.00									
C20	1.00	0.09	0.00	0.00	0.91	0.00	0.00	0.00	0.00
0.00									
C3	1.00	0.09	0.00	0.00	0.91	0.00	0.00	0.00	0.57
0.00									
C4	1.00	0.08	0.00	0.00	0.92	0.00	0.00	0.00	0.89
0.00									
C5	1.00	0.08	0.00	0.00	0.92	0.00	0.00	0.00	0.50
0.00									
C6	1.00	0.09	0.00	0.00	0.91	0.00	0.00	0.00	0.59
0.00									
C7	1.00	0.67	0.00	0.00	0.00	0.31	0.00	0.02	0.00
0.00									
C8	1.00	0.08	0.00	0.00	0.92	0.00	0.00	0.00	0.87
0.00									
C8_2	1.00	0.08	0.40	0.00	0.52	0.00	0.00	0.00	0.00
0.00									
C9_1	1.00	0.08	0.00	0.00	0.92	0.00	0.00	0.00	0.86
0.00									
C9_2	1.00	0.08	0.40	0.00	0.52	0.00	0.00	0.00	0.00
0.00									

****
Conduit Surcharge Summary
****

Conduit	Hours Full: Both Ends	Hours Full: Upstream	Hours Full: Dnstream	Hours Above Full Normal Flow	Hours Capacity Limited
C19	12.07	12.15	12.07	11.90	11.72
C20	0.62	12.07	0.62	12.18	0.62
C3	0.01	0.01	2.18	0.01	0.01
C6	0.01	0.01	2.18	0.01	0.01

```
Analysis begun on:  Fri Feb 21 12:04:31 2025
Analysis ended on:  Fri Feb 21 12:04:31 2025
Total elapsed time: < 1 sec
```

10 yr - SCS Type II 24 hr storm

```
  EPA STORM WATER MANAGEMENT MODEL - VERSION 5.2 (Build 5.2.4)
  ------------------------------------------------------------


  *************
  Element Count
  *************
  Number of rain gages ...... 8
  Number of subcatchments ... 20
  Number of nodes ........... 40
  Number of links ........... 39
  Number of pollutants ...... 0
  Number of land uses ....... 0


  ****************
  Raingage Summary
  ****************
                                                        Data       Recording
  Name                  Data Source                     Type       Interval
  ---------------------------------------------------------------------------
  100yr_SCS_Type_II_12hr 100yr_SCS_Type_II_12hr         INTENSITY    6 min.
  100yr_SCS_Type_II_24hr 100yr_SCS_Type_II_24hr         INTENSITY    6 min.
  10yr_SCS_Type_II_24hr 10yr_SCS_Type_II_24hr          INTENSITY    6 min.
  25mm_WQ_Chicago_4h   25mm_WQ_Chicago_4h             INTENSITY   10 min.
  25yr_SCS_Type_II_24hr 25yr_SCS_Type_II_24hr          INTENSITY    6 min.
  2yr_SCS_Type_II_24hr 2yr_SCS_Type_II_24hr           INTENSITY    6 min.
  50yr_SCS_Type_II_24hr 50yr_SCS_Type_II_24hr          INTENSITY    6 min.
  5yr_SCS_Type_II_24hr 5yr_SCS_Type_II_24hr           INTENSITY    6 min.


  ********************
  Subcatchment Summary
  ********************
  Name                        Area     Width   %Imperv    %Slope Rain Gage
Outlet
  ---------------------------------------------------------------------------------
---------------------------
  101                         2.50    188.38     80.94    1.0000
10yr_SCS_Type_II_24hr J2
  102                         2.06    168.48     77.85    1.0000
10yr_SCS_Type_II_24hr J6
  103                         2.08    152.14     75.89    1.0000
10yr_SCS_Type_II_24hr J1
  104                         2.16    180.69     72.65    1.0000
10yr_SCS_Type_II_24hr J5
  105                         3.45    193.41     49.97    1.0000
10yr_SCS_Type_II_24hr J13
  106                         0.54    438.19     18.82    1.0000
10yr_SCS_Type_II_24hr J8
  107                         0.42    460.87     22.40    1.0000
10yr_SCS_Type_II_24hr J13
  108                         0.60    492.86     19.87    1.0000
10yr_SCS_Type_II_24hr J10
  109                         0.45    530.52     24.09    1.0000
10yr_SCS_Type_II_24hr J15
  110                         0.27    265.20     22.21    1.0000
10yr_SCS_Type_II_24hr J10
```

111	0.21	313.72	25.95	1.0000	10yr_SCS_Type_II_24hr J15
112	0.37	548.02	24.74	1.0000	10yr_SCS_Type_II_24hr J11
113	0.35	523.97	25.80	1.0000	10yr_SCS_Type_II_24hr J16
EXT-1	0.56	70.08	5.00	1.1380	10yr_SCS_Type_II_24hr J2
EXT-2	0.36	57.70	5.00	1.3800	10yr_SCS_Type_II_24hr J8
EXT-3	4.83	135.00	5.00	0.2270	10yr_SCS_Type_II_24hr J8
EXT-4	12.34	211.38	5.00	0.2040	10yr_SCS_Type_II_24hr J9
EXT-5	12.58	219.50	5.05	0.0810	10yr_SCS_Type_II_24hr J10
EXT-6	1.12	91.50	5.00	0.4810	10yr_SCS_Type_II_24hr J10
EXT-7	8.50	225.46	7.72	0.2430	10yr_SCS_Type_II_24hr J11

****
Node Summary
****

Name	Type	Invert Elev.	Max. Depth	Ponded Area	External Inflow
J1	JUNCTION	82.11	1.00	0.0	
J10	JUNCTION	83.94	1.50	0.0	
J11	JUNCTION	83.48	1.50	0.0	
J12	JUNCTION	82.00	1.50	0.0	
J13	JUNCTION	83.86	1.50	0.0	
J14	JUNCTION	82.10	1.50	0.0	
J15	JUNCTION	83.02	1.50	0.0	
J16	JUNCTION	82.54	1.50	0.0	
J17	JUNCTION	81.77	1.50	0.0	
J18	JUNCTION	83.74	1.50	0.0	
J19	JUNCTION	82.78	1.50	0.0	
J2	JUNCTION	81.44	1.00	0.0	
J20	JUNCTION	82.78	1.50	0.0	
J21	JUNCTION	82.24	1.50	0.0	
J22	JUNCTION	82.24	1.50	0.0	
J23	JUNCTION	82.21	1.50	0.0	
J24	JUNCTION	82.21	1.50	0.0	
J25	JUNCTION	82.24	1.50	0.0	
J26	JUNCTION	82.24	1.50	0.0	
J27	JUNCTION	82.18	1.50	0.0	
J28	JUNCTION	82.18	1.50	0.0	
J29	JUNCTION	82.19	1.50	0.0	
J3	JUNCTION	80.60	1.00	0.0	
J30	JUNCTION	82.19	1.50	0.0	
J31	JUNCTION	82.80	1.50	0.0	
J32	JUNCTION	82.80	1.50	0.0	
J33	JUNCTION	82.19	1.50	0.0	
J34	JUNCTION	82.19	1.50	0.0	
J35	JUNCTION	81.88	1.50	0.0	
J36	JUNCTION	81.88	1.50	0.0	

J4	JUNCTION	83.74	1.50	0.0
J5	JUNCTION	82.29	1.00	0.0
J6	JUNCTION	81.52	1.00	0.0
J7	JUNCTION	80.64	1.00	0.0
J8	JUNCTION	83.86	1.50	0.0
J9	JUNCTION	82.14	1.50	0.0
BerryMunDrain	OUTFALL	82.06	0.30	0.0
CrowderMunDrain	OUTFALL	80.00	0.00	0.0
FergusonMunDrain	OUTFALL	81.85	0.30	0.0
SU1	STORAGE	80.00	3.00	0.0

****
Link Summary
****

Name	From Node	To Node	Type	Length	% Slope	Roughness
C1	J1	J2	CONDUIT	135.3	0.4997	0.0350
C10_1	J10	J4	CONDUIT	67.2	0.3006	0.0350
C10_2	J18	J11	CONDUIT	79.4	0.3275	0.0350
C11_1	J11	J19	CONDUIT	116.9	0.5997	0.0350
C11_3	J20	J23	CONDUIT	97.6	0.5820	0.0350
C11_4	J24	J12	CONDUIT	30.1	0.7019	0.0350
C12_1	J13	J27	CONDUIT	229.4	0.7307	0.0350
C12_2	J28	J14	CONDUIT	17.8	0.4891	0.0350
C13_1	J15	J29	CONDUIT	279.5	0.2966	0.0350
C13_2	J30	J14	CONDUIT	18.4	0.5011	0.0350
C14_1	J15	J31	CONDUIT	71.8	0.3007	0.0350
C14_2	J32	J16	CONDUIT	78.7	0.3278	0.0350
C15_1	J16	J33	CONDUIT	117.5	0.3003	0.0350
C15_3	J34	J35	CONDUIT	97.6	0.3216	0.0350
C15_4	J36	J17	CONDUIT	27.7	0.3748	0.0350
C17	J17	FergusonMunDrain	CONDUIT	8.4	0.5968	0.0100
C19	J9	J14	CONDUIT	13.7	0.2982	0.0130
C2	J2	J3	CONDUIT	168.2	0.5001	0.0350
C20	J14	BerryMunDrain	CONDUIT	13.2	0.3020	0.0130
C3	J3	SU1	CONDUIT	119.2	0.5001	0.0350

```
  C4                J5                J6                CONDUIT          153.8
0.5001    0.0350
  C5                J6                J7                CONDUIT          176.2
0.5001    0.0350
  C6                J7                SU1               CONDUIT          127.4
0.4999    0.0350
  C7                J12               J17               CONDUIT           13.9
0.7203    0.0100
  C8                J8                J25               CONDUIT          225.6
0.7186    0.0350
  C8_2              J26               J9                CONDUIT           20.1
0.5015    0.0350
  C9_1              J10               J21               CONDUIT          285.7
0.5946    0.0350
  C9_2              J22               J9                CONDUIT           17.6
0.5973    0.0350
  C16               SU1               CrowderMunDrain   ORIFICE
  W1                J4                J18               WEIR
  W10               J35               J36               WEIR
  W2                J19               J20               WEIR
  W3                J21               J22               WEIR
  W4                J23               J24               WEIR
  W5                J25               J26               WEIR
  W6                J27               J28               WEIR
  W7                J29               J30               WEIR
  W8                J31               J32               WEIR
  W9                J33               J34               WEIR


  *********************
  Cross Section Summary
  *********************
                                        Full     Full     Hyd.     Max.   No. of
Full
  Conduit           Shape               Depth     Area     Rad.    Width  Barrels
Flow
  ---------------------------------------------------------------------------------
------
  C1                TRAPEZOIDAL          1.00     4.00     0.55     7.00        1
5.40
  C10_1             TRAPEZOIDAL          1.50     9.75     0.85    11.00        1
13.69
  C10_2             TRAPEZOIDAL          1.50     9.75     0.85    11.00        1
14.29
  C11_1             TRAPEZOIDAL          1.50     9.75     0.85    11.00        1
19.34
  C11_3             TRAPEZOIDAL          1.50     9.75     0.85    11.00        1
19.05
  C11_4             TRAPEZOIDAL          1.50     9.75     0.85    11.00        1
20.93
  C12_1             TRAPEZOIDAL          1.50     9.75     0.85    11.00        1
21.35
  C12_2             TRAPEZOIDAL          1.50     9.75     0.85    11.00        1
17.47
  C13_1             TRAPEZOIDAL          1.50     9.75     0.85    11.00        1
13.60
  C13_2             TRAPEZOIDAL          1.50     9.75     0.85    11.00        1
17.68
  C14_1             TRAPEZOIDAL          1.50     9.75     0.85    11.00        1
13.70
```

```
  C14_2            TRAPEZOIDAL          1.50     9.75     0.85    11.00        1
14.30
  C15_1            TRAPEZOIDAL          1.50     9.75     0.85    11.00        1
13.69
  C15_3            TRAPEZOIDAL          1.50     9.75     0.85    11.00        1
14.17
  C15_4            TRAPEZOIDAL          1.50     9.75     0.85    11.00        1
15.29
  C17              CIRCULAR             0.30     0.07     0.07     0.30        1
0.10
  C19              CIRCULAR             0.30     0.07     0.07     0.30        1
0.05
  C2               TRAPEZOIDAL          1.00     4.00     0.55     7.00        1
5.40
  C20              CIRCULAR             0.30     0.07     0.07     0.30        1
0.05
  C3               TRAPEZOIDAL          1.00     4.00     0.55     7.00        1
5.40
  C4               TRAPEZOIDAL          1.00     4.00     0.55     7.00        1
5.40
  C5               TRAPEZOIDAL          1.00     4.00     0.55     7.00        1
5.40
  C6               TRAPEZOIDAL          1.00     4.00     0.55     7.00        1
5.40
  C7               CIRCULAR             0.30     0.07     0.07     0.30        1
0.11
  C8               TRAPEZOIDAL          1.50     9.75     0.85    11.00        1
21.17
  C8_2             TRAPEZOIDAL          1.50     9.75     0.85    11.00        1
17.69
  C9_1             TRAPEZOIDAL          1.50     9.75     0.85    11.00        1
19.26
  C9_2             TRAPEZOIDAL          1.50     9.75     0.85    11.00        1
19.30


  ****************
  Analysis Options
  ****************
  Flow Units ............... CMS
  Process Models:
    Rainfall/Runoff ........ YES
    RDII ................... NO
    Snowmelt ............... NO
    Groundwater ............ NO
    Flow Routing ........... YES
    Ponding Allowed ........ NO
    Water Quality .......... NO
  Infiltration Method ...... HORTON
  Flow Routing Method ...... DYNWAVE
  Surcharge Method ......... EXTRAN
  Starting Date ............ 01/27/2025 00:00:00
  Ending Date .............. 01/28/2025 00:00:00
  Antecedent Dry Days ...... 0.0
  Report Time Step ......... 00:01:00
  Wet Time Step ............ 00:05:00
  Dry Time Step ............ 00:05:00
  Routing Time Step ........ 5.00 sec
  Variable Time Step ....... YES
```

```
Maximum Trials ........... 8
Number of Threads ........ 8
Head Tolerance ........... 0.001500 m

**************************        Volume         Depth
Runoff Quantity Continuity     hectare-m            mm
**************************     ---------       -------
Total Precipitation ......         4.682        84.000
Evaporation Loss .........         0.000         0.000
Infiltration Loss ........         1.719        30.838
Surface Runoff ...........         2.102        37.719
Final Storage ............         0.866        15.530
Continuity Error (%) .....        -0.104

**************************        Volume        Volume
Flow Routing Continuity        hectare-m      10^6 ltr
**************************     ---------     ---------
Dry Weather Inflow .......         0.000         0.000
Wet Weather Inflow .......         2.101        21.008
Groundwater Inflow .......         0.000         0.000
RDII Inflow ..............         0.000         0.000
External Inflow ..........         0.000         0.000
External Outflow .........         1.664        16.635
Flooding Loss ............         0.000         0.000
Evaporation Loss .........         0.000         0.000
Exfiltration Loss ........         0.000         0.000
Initial Stored Volume ....         0.000         0.000
Final Stored Volume ......         0.486         4.861
Continuity Error (%) .....        -2.323

*************************
Highest Continuity Errors
*************************
Node J29 (100.00%)
Node J33 (90.24%)
Node J18 (80.42%)
Node J36 (63.12%)
Node J31 (61.80%)

***************************
Time-Step Critical Elements
***************************
Link C17 (41.14%)
Link C20 (15.83%)
Link C19 (1.04%)

********************************
Highest Flow Instability Indexes
********************************
All links are stable.
```

```
  ********************************
  Most Frequent Nonconverging Nodes
  ********************************
  Convergence obtained at all time steps.


  *************************
  Routing Time Step Summary
  *************************
  Minimum Time Step           :     0.50 sec
  Average Time Step           :     3.52 sec
  Maximum Time Step           :     5.00 sec
  % of Time in Steady State   :     0.00
  Average Iterations per Step :     2.00
  % of Steps Not Converging   :     0.00
  Time Step Frequencies       :
      5.000 -  3.155 sec      :    42.89 %
      3.155 -  1.991 sec      :    53.46 %
      1.991 -  1.256 sec      :     3.62 %
      1.256 -  0.792 sec      :     0.02 %
      0.792 -  0.500 sec      :     0.02 %


  ****************************
  Subcatchment Runoff Summary
  ****************************

  ---------------------------------------------------------------------------------
---------------------------------------------
                            Total      Total      Total      Total     Imperv
Perv      Total       Total     Peak  Runoff
                           Precip      Runon       Evap      Infil     Runoff
Runoff     Runoff      Runoff   Runoff   Coeff
  Subcatchment                  mm         mm         mm         mm         mm
mm         mm    10^6 ltr      CMS
  ---------------------------------------------------------------------------------
---------------------------------------------
  101                       84.00       0.00       0.00       8.25      66.23
6.67      72.90        1.82     0.55   0.868
  102                       84.00       0.00       0.00       9.55      63.75
7.77      71.53        1.48     0.46   0.851
  103                       84.00       0.00       0.00      10.43      62.11
8.38      70.50        1.47     0.44   0.839
  104                       84.00       0.00       0.00      11.83      59.53
9.51      69.04        1.49     0.46   0.822
  105                       84.00       0.00       0.00      20.77      40.94
17.65      58.59        2.02     0.51   0.698
  106                       84.00       0.00       0.00      32.03      15.51
31.91      47.41        0.26     0.09   0.564
  107                       84.00       0.00       0.00      30.39      18.46
30.84      49.30        0.20     0.08   0.587
  108                       84.00       0.00       0.00      30.07      16.38
33.04      49.41        0.30     0.11   0.588
  109                       84.00       0.00       0.00      28.39      19.85
31.52      51.38        0.23     0.09   0.612
  110                       84.00       0.00       0.00      33.66      18.30
27.70      46.00        0.12     0.05   0.548
  111                       84.00       0.00       0.00      32.04      21.39
26.48      47.87        0.10     0.04   0.570
```

```
  112                       84.00       0.00       0.00      31.20      20.39
28.27      48.66        0.18     0.07   0.579
  113                       84.00       0.00       0.00      30.43      21.27
28.20      49.46        0.17     0.07   0.589
  EXT-1                     84.00       0.00       0.00      41.11       4.13
32.23      36.36        0.20     0.03   0.433
  EXT-2                     84.00       0.00       0.00      41.11       4.12
32.63      36.75        0.13     0.02   0.438
  EXT-3                     84.00       0.00       0.00      40.33       4.15
24.16      28.30        1.37     0.09   0.337
  EXT-4                     84.00       0.00       0.00      33.25       4.12
25.17      29.28        3.61     0.23   0.349
  EXT-5                     84.00       0.00       0.00      34.86       4.15
19.24      23.38        2.94     0.21   0.278
  EXT-6                     84.00       0.00       0.00      41.11       4.12
30.59      34.71        0.39     0.04   0.413
  EXT-7                     84.00       0.00       0.00      39.28       6.38
23.45      29.83        2.54     0.23   0.355


  ******************
  Node Depth Summary
  ******************

  -------------------------------------------------------------------------------
                                Average  Maximum  Maximum  Time of Max    Reported
                                  Depth    Depth      HGL   Occurrence   Max Depth
  Node                  Type      Meters   Meters   Meters  days hr:min      Meters
  -------------------------------------------------------------------------------
  J1                    JUNCTION     0.04     0.31    82.43     0  11:56        0.31
  J10                   JUNCTION     0.06     0.20    84.14     0  12:00        0.20
  J11                   JUNCTION     0.40     0.65    84.13     0  13:57        0.65
  J12                   JUNCTION     0.08     0.17    82.17     0  15:37        0.17
  J13                   JUNCTION     0.03     0.25    84.11     0  11:58        0.25
  J14                   JUNCTION     0.54     1.05    83.15     0  12:32        1.05
  J15                   JUNCTION     0.01     0.11    83.13     0  12:01        0.11
  J16                   JUNCTION     0.12     0.21    82.76     0  23:58        0.21
  J17                   JUNCTION     0.15     0.31    82.08     0  15:40        0.31
  J18                   JUNCTION     0.22     0.39    84.13     0  13:58        0.39
  J19                   JUNCTION     0.94     1.35    84.13     0  13:58        1.35
  J2                    JUNCTION     0.07     0.49    81.93     0  11:57        0.49
  J20                   JUNCTION     0.42     0.74    83.52     0  15:35        0.74
  J21                   JUNCTION     0.88     1.39    83.63     0  16:28        1.39
  J22                   JUNCTION     0.71     1.36    83.61     0  16:22        1.36
  J23                   JUNCTION     0.76     1.30    83.52     0  15:34        1.30
  J24                   JUNCTION     0.03     0.07    82.29     0  15:34        0.07
  J25                   JUNCTION     0.84     1.37    83.61     0  16:23        1.37
  J26                   JUNCTION     0.72     1.37    83.61     0  16:22        1.37
  J27                   JUNCTION     0.91     1.42    83.60     0  12:09        1.42
  J28                   JUNCTION     0.47     0.96    83.15     0  12:32        0.96
  J29                   JUNCTION     0.37     0.63    82.82     1  00:00        0.63
  J3                    JUNCTION     0.19     0.56    81.16     0  13:18        0.56
  J30                   JUNCTION     0.47     0.96    83.15     0  12:32        0.96
  J31                   JUNCTION     0.17     0.33    83.13     0  12:01        0.33
  J32                   JUNCTION     0.00     0.00    82.80     0  00:00        0.00
  J33                   JUNCTION     0.36     0.57    82.76     1  00:00        0.57
  J34                   JUNCTION     0.00     0.00    82.19     0  00:00        0.00
  J35                   JUNCTION     0.00     0.00    81.88     0  00:00        0.00
```

```
  J36                  JUNCTION     0.09     0.20    82.08     0  15:40        0.20
  J4                   JUNCTION     0.23     0.40    84.14     0  12:01        0.40
  J5                   JUNCTION     0.04     0.32    82.61     0  11:56        0.32
  J6                   JUNCTION     0.06     0.47    81.99     0  11:57        0.47
  J7                   JUNCTION     0.17     0.52    81.16     0  13:18        0.52
  J8                   JUNCTION     0.04     0.14    84.00     0  12:00        0.14
  J9                   JUNCTION     0.80     1.47    83.61     0  16:22        1.47
  BerryMunDrain        OUTFALL      0.20     0.30    82.36     0  12:05        0.30
  CrowderMunDrain      OUTFALL      0.00     0.00    80.00     0  00:00        0.00
  FergusonMunDrain     OUTFALL      0.08     0.18    82.03     0  15:40        0.18
  SU1                  STORAGE      0.58     1.15    81.15     0  13:18        1.15


  *******************
  Node Inflow Summary
  *******************

  -------------------------------------------------------------------------------
----------------
                                   Maximum  Maximum                   Lateral
Total        Flow
                                   Lateral    Total  Time of Max      Inflow
Inflow     Balance
                                    Inflow   Inflow   Occurrence      Volume
Volume       Error
  Node                 Type           CMS      CMS  days hr:min    10^6 ltr    10^6
ltr     Percent
  -------------------------------------------------------------------------------
----------------
  J1                   JUNCTION     0.440    0.440     0  11:54        1.47
1.47       0.103
  J10                  JUNCTION     0.395    0.395     0  11:54        3.74
3.76       0.389
  J11                  JUNCTION     0.303    0.303     0  11:54        2.71
2.72       9.870
  J12                  JUNCTION     0.000    0.066     0  15:34           0
1.56       0.270
  J13                  JUNCTION     0.590    0.590     0  11:54        2.23
2.23      -0.529
  J14                  JUNCTION     0.000    0.301     0  12:05           0
8.98       0.344
  J15                  JUNCTION     0.129    0.129     0  11:54       0.329
0.342      -0.733
  J16                  JUNCTION     0.069    0.069     0  11:54       0.173
0.185      47.318
  J17                  JUNCTION     0.000    0.066     0  15:37           0
1.56       0.568
  J18                  JUNCTION     0.000    0.044     0  11:57           0
0.0547     410.733
  J19                  JUNCTION     0.000    0.156     0  11:54           0
2.42      18.899
  J2                   JUNCTION     0.580    0.994     0  11:55        2.03
3.49      -0.175
  J20                  JUNCTION     0.000    0.074     0  13:58           0
2.04       8.677
  J21                  JUNCTION     0.000    0.342     0  12:00           0
3.7      31.912
  J22                  JUNCTION     0.000    0.085     0  13:40           0
2.85       0.675
```

```
  J23                  JUNCTION     0.000    0.067     0  15:17           0
1.88      20.306
  J24                  JUNCTION     0.000    0.066     0  15:34           0
1.56       0.098
  J25                  JUNCTION     0.000    0.190     0  12:00           0
1.77      59.553
  J26                  JUNCTION     0.000    0.046     0  17:31           0
1.2       1.877
  J27                  JUNCTION     0.000    0.554     0  11:58           0
2.24      45.511
  J28                  JUNCTION     0.000    0.296     0  12:09           0
1.55       0.743
  J29                  JUNCTION     0.000    0.089     0  12:01           0
0.311  310960.118 ltr
  J3                   JUNCTION     0.000    1.009     0  11:59           0
3.5       0.231
  J30                  JUNCTION     0.000    0.042     0  12:05           0
0.0441      37.459
  J31                  JUNCTION     0.000    0.020     0  11:47           0
0.0332     161.763
  J32                  JUNCTION     0.000    0.000     0  00:00           0
0       0.000 ltr
  J33                  JUNCTION     0.000    0.058     0  11:58           0
0.125     924.185
  J34                  JUNCTION     0.000    0.000     0  00:00           0
0       0.000 ltr
  J35                  JUNCTION     0.000    0.000     0  00:00           0
0       0.000 ltr
  J36                  JUNCTION     0.000    0.013     0  14:41           0
0.00783     171.146
  J4                   JUNCTION     0.000    0.027     0  11:53           0
0.0414     135.898
  J5                   JUNCTION     0.458    0.458     0  11:54        1.49
1.49       0.113
  J6                   JUNCTION     0.456    0.883     0  11:55        1.48
2.97      -0.176
  J7                   JUNCTION     0.000    0.892     0  11:59           0
2.97       0.198
  J8                   JUNCTION     0.205    0.205     0  11:54        1.75
1.75      -0.045
  J9                   JUNCTION     0.229    0.229     0  11:54        3.61
7.6       0.652
  BerryMunDrain        OUTFALL      0.000    0.236     0  12:32           0
8.9       0.000
  CrowderMunDrain      OUTFALL      0.000    0.143     0  13:18           0
6.19       0.000
  FergusonMunDrain     OUTFALL      0.000    0.065     0  15:40           0
1.54       0.000
  SU1                  STORAGE      0.000    1.834     0  12:01           0
6.46       1.610


  **********************
  Node Surcharge Summary
  **********************

  No nodes were surcharged.
```

```
  *********************
  Node Flooding Summary
  *********************

  No nodes were flooded.


  **********************
  Storage Volume Summary
  **********************

  -------------------------------------------------------------------------------
---------------
                          Average    Avg   Evap  Exfil     Maximum    Max    Time of
Max    Maximum
                           Volume   Pcnt   Pcnt   Pcnt      Volume   Pcnt
Occurrence    Outflow
  Storage Unit            1000 m³   Full   Loss   Loss     1000 m³   Full    days
hr:min        CMS
  -------------------------------------------------------------------------------
---------------
  SU1                       0.720    5.4    0.0    0.0       1.989   14.8       0
13:18      0.143


  ************************
  Outfall Loading Summary
  ************************

  ------------------------------------------------------------
                         Flow       Avg       Max       Total
                         Freq      Flow      Flow      Volume
  Outfall Node           Pcnt       CMS       CMS    10^6 ltr
  ------------------------------------------------------------
  BerryMunDrain         93.30     0.138     0.236       8.901
  CrowderMunDrain       92.56     0.090     0.143       6.194
  FergusonMunDrain      56.05     0.046     0.065       1.540
  ------------------------------------------------------------
  System                80.64     0.274     0.424      16.635


  ********************
  Link Flow Summary
  ********************

  ---------------------------------------------------------------------------
                                 Maximum  Time of Max   Maximum    Max/    Max/
                                  |Flow|   Occurrence   |Veloc|    Full    Full
  Link                  Type        CMS  days hr:min     m/sec    Flow   Depth
  ---------------------------------------------------------------------------
  C1                    CONDUIT     0.426     0  11:56      0.49    0.08    0.40
  C10_1                 CONDUIT     0.027     0  11:53      0.06    0.00    0.20
  C10_2                 CONDUIT     0.044     0  11:57      0.10    0.00    0.34
  C11_1                 CONDUIT     0.156     0  11:54      0.07    0.01    0.66
  C11_3                 CONDUIT     0.067     0  15:17      0.26    0.00    0.68
  C11_4                 CONDUIT     0.066     0  15:34      0.22    0.00    0.08
  C12_1                 CONDUIT     0.554     0  11:58      0.19    0.03    0.54
```

C12_2	CONDUIT	0.273	0	12:10	0.09	0.02	0.67
C13_1	CONDUIT	0.089	0	12:01	0.26	0.01	0.21
C13_2	CONDUIT	0.042	0	12:05	0.02	0.00	0.67
C14_1	CONDUIT	0.020	0	11:47	0.05	0.00	0.15
C14_2	CONDUIT	0.000	0	00:00	0.00	0.00	0.07
C15_1	CONDUIT	0.058	0	11:58	0.12	0.00	0.26
C15_3	CONDUIT	0.000	0	00:00	0.00	0.00	0.00
C15_4	CONDUIT	0.013	0	14:41	0.08	0.00	0.17
C17	CONDUIT	0.065	0	15:40	1.47	0.67	0.60
C19	CONDUIT	0.197	0	17:33	2.79	3.73	1.00
C2	CONDUIT	1.009	0	11:59	0.89	0.19	0.47
C20	CONDUIT	0.236	0	12:32	3.34	4.44	1.00
C3	CONDUIT	0.978	0	12:01	0.57	0.18	0.78
C4	CONDUIT	0.440	0	11:56	0.52	0.08	0.39
C5	CONDUIT	0.892	0	11:59	0.86	0.17	0.45
C6	CONDUIT	0.857	0	12:02	0.51	0.16	0.76
C7	CONDUIT	0.066	0	15:37	1.52	0.61	0.59
C8	CONDUIT	0.190	0	12:00	0.21	0.01	0.48
C8_2	CONDUIT	0.049	0	17:31	0.02	0.00	0.95
C9_1	CONDUIT	0.342	0	12:00	0.24	0.02	0.49
C9_2	CONDUIT	0.083	0	13:38	0.02	0.00	0.94
C16	ORIFICE	0.143	0	13:18			1.00
W1	WEIR	0.000	0	00:00			0.00
W10	WEIR	0.000	0	00:00			0.00
W2	WEIR	0.074	0	13:58			0.63
W3	WEIR	0.085	0	13:40			1.00
W4	WEIR	0.066	0	15:34			0.58
W5	WEIR	0.046	0	17:31			1.00
W6	WEIR	0.296	0	12:09			1.00
W7	WEIR	0.000	0	00:00			0.00
W8	WEIR	0.000	0	00:00			0.00
W9	WEIR	0.000	0	00:00			0.00

****
Flow Classification Summary
****

Conduit	Adjusted /Actual Length	Fraction of Time in Flow Class: Dry	Up Dry	Down Dry	Sub Crit	Sup Crit	Up Crit	Down Crit	Norm Ltd	Inlet Ctrl
C1	1.00	0.07	0.00	0.00	0.93	0.00	0.00	0.00	0.91	0.00
C10_1	1.00	0.07	0.00	0.00	0.93	0.00	0.00	0.00	0.16	0.00
C10_2	1.00	0.00	0.50	0.00	0.50	0.00	0.00	0.00	0.00	0.00
C11_1	1.00	0.00	0.00	0.00	1.00	0.00	0.00	0.00	0.43	0.00
C11_3	1.00	0.52	0.00	0.00	0.48	0.00	0.00	0.00	0.03	0.00

C11_4	1.00	0.60	0.00	0.00	0.40	0.00	0.00	0.00	0.39
0.00									
C12_1	1.00	0.07	0.00	0.00	0.93	0.00	0.00	0.00	0.89
0.00									
C12_2	1.00	0.08	0.39	0.00	0.54	0.00	0.00	0.00	0.00
0.00									
C13_1	1.00	0.07	0.00	0.00	0.93	0.00	0.00	0.00	0.83
0.00									
C13_2	1.00	0.08	0.39	0.00	0.53	0.00	0.00	0.00	0.00
0.00									
C14_1	1.00	0.07	0.00	0.00	0.93	0.00	0.00	0.00	0.38
0.00									
C14_2	1.00	0.07	0.93	0.00	0.00	0.00	0.00	0.00	0.00
0.00									
C15_1	1.00	0.07	0.00	0.00	0.93	0.00	0.00	0.00	0.37
0.00									
C15_3	1.00	1.00	0.00	0.00	0.00	0.00	0.00	0.00	0.00
0.00									
C15_4	1.00	0.60	0.01	0.00	0.39	0.00	0.00	0.00	0.00
0.00									
C17	1.00	0.61	0.00	0.00	0.00	0.39	0.00	0.00	0.23
0.00									
C19	1.00	0.07	0.00	0.00	0.91	0.02	0.00	0.00	0.22
0.00									
C2	1.00	0.07	0.00	0.00	0.93	0.00	0.00	0.00	0.50
0.00									
C20	1.00	0.08	0.00	0.00	0.92	0.00	0.00	0.00	0.00
0.00									
C3	1.00	0.08	0.00	0.00	0.92	0.00	0.00	0.00	0.50
0.00									
C4	1.00	0.07	0.00	0.00	0.93	0.00	0.00	0.00	0.90
0.00									
C5	1.00	0.07	0.00	0.00	0.93	0.00	0.00	0.00	0.50
0.00									
C6	1.00	0.08	0.00	0.00	0.92	0.00	0.00	0.00	0.52
0.00									
C7	1.00	0.60	0.00	0.00	0.00	0.38	0.00	0.02	0.00
0.00									
C8	1.00	0.07	0.00	0.00	0.93	0.00	0.00	0.00	0.88
0.00									
C8_2	1.00	0.07	0.40	0.00	0.53	0.00	0.00	0.00	0.00
0.00									
C9_1	1.00	0.07	0.00	0.00	0.93	0.00	0.00	0.00	0.87
0.00									
C9_2	1.00	0.07	0.40	0.00	0.52	0.00	0.00	0.00	0.00
0.00									

****
Conduit Surcharge Summary
****

Conduit	Hours Full: Both Ends	Hours Full: Upstream	Hours Full: Dnstream	Hours Above Full Normal Flow	Hours Capacity Limited
C19	12.10	12.19	12.10	11.98	11.81
C20	9.79	12.10	9.79	12.21	9.79

C3	0.01	0.01	4.65	0.01	0.01
C6	0.01	0.01	4.65	0.01	0.01

Analysis begun on: Fri Feb 21 12:07:11 2025
Analysis ended on: Fri Feb 21 12:07:11 2025
Total elapsed time: < 1 sec

25 yr - SCS Type II 24 hr storm

```
  EPA STORM WATER MANAGEMENT MODEL - VERSION 5.2 (Build 5.2.4)
  ------------------------------------------------------------


  *************
  Element Count
  *************
  Number of rain gages ...... 8
  Number of subcatchments ... 20
  Number of nodes ........... 40
  Number of links ........... 39
  Number of pollutants ...... 0
  Number of land uses ....... 0


  ****************
  Raingage Summary
  ****************
                                                        Data       Recording
  Name                  Data Source                     Type       Interval
  ---------------------------------------------------------------------------
  100yr_SCS_Type_II_12hr 100yr_SCS_Type_II_12hr         INTENSITY    6 min.
  100yr_SCS_Type_II_24hr 100yr_SCS_Type_II_24hr         INTENSITY    6 min.
  10yr_SCS_Type_II_24hr 10yr_SCS_Type_II_24hr          INTENSITY    6 min.
  25mm_WQ_Chicago_4h   25mm_WQ_Chicago_4h             INTENSITY   10 min.
  25yr_SCS_Type_II_24hr 25yr_SCS_Type_II_24hr          INTENSITY    6 min.
  2yr_SCS_Type_II_24hr 2yr_SCS_Type_II_24hr           INTENSITY    6 min.
  50yr_SCS_Type_II_24hr 50yr_SCS_Type_II_24hr          INTENSITY    6 min.
  5yr_SCS_Type_II_24hr 5yr_SCS_Type_II_24hr           INTENSITY    6 min.


  ********************
  Subcatchment Summary
  ********************
  Name                        Area     Width   %Imperv    %Slope Rain Gage
Outlet
  ---------------------------------------------------------------------------------
---------------------------
  101                         2.50    188.38     80.94    1.0000
25yr_SCS_Type_II_24hr J2
  102                         2.06    168.48     77.85    1.0000
25yr_SCS_Type_II_24hr J6
  103                         2.08    152.14     75.89    1.0000
25yr_SCS_Type_II_24hr J1
  104                         2.16    180.69     72.65    1.0000
25yr_SCS_Type_II_24hr J5
  105                         3.45    193.41     49.97    1.0000
25yr_SCS_Type_II_24hr J13
  106                         0.54    438.19     18.82    1.0000
25yr_SCS_Type_II_24hr J8
  107                         0.42    460.87     22.40    1.0000
25yr_SCS_Type_II_24hr J13
  108                         0.60    492.86     19.87    1.0000
25yr_SCS_Type_II_24hr J10
  109                         0.45    530.52     24.09    1.0000
25yr_SCS_Type_II_24hr J15
  110                         0.27    265.20     22.21    1.0000
25yr_SCS_Type_II_24hr J10
```

111	0.21	313.72	25.95	1.0000	25yr_SCS_Type_II_24hr J15
112	0.37	548.02	24.74	1.0000	25yr_SCS_Type_II_24hr J11
113	0.35	523.97	25.80	1.0000	25yr_SCS_Type_II_24hr J16
EXT-1	0.56	70.08	5.00	1.1380	25yr_SCS_Type_II_24hr J2
EXT-2	0.36	57.70	5.00	1.3800	25yr_SCS_Type_II_24hr J8
EXT-3	4.83	135.00	5.00	0.2270	25yr_SCS_Type_II_24hr J8
EXT-4	12.34	211.38	5.00	0.2040	25yr_SCS_Type_II_24hr J9
EXT-5	12.58	219.50	5.05	0.0810	25yr_SCS_Type_II_24hr J10
EXT-6	1.12	91.50	5.00	0.4810	25yr_SCS_Type_II_24hr J10
EXT-7	8.50	225.46	7.72	0.2430	25yr_SCS_Type_II_24hr J11

****
Node Summary
****

Name	Type	Invert Elev.	Max. Depth	Ponded Area	External Inflow
J1	JUNCTION	82.11	1.00	0.0	
J10	JUNCTION	83.94	1.50	0.0	
J11	JUNCTION	83.48	1.50	0.0	
J12	JUNCTION	82.00	1.50	0.0	
J13	JUNCTION	83.86	1.50	0.0	
J14	JUNCTION	82.10	1.50	0.0	
J15	JUNCTION	83.02	1.50	0.0	
J16	JUNCTION	82.54	1.50	0.0	
J17	JUNCTION	81.77	1.50	0.0	
J18	JUNCTION	83.74	1.50	0.0	
J19	JUNCTION	82.78	1.50	0.0	
J2	JUNCTION	81.44	1.00	0.0	
J20	JUNCTION	82.78	1.50	0.0	
J21	JUNCTION	82.24	1.50	0.0	
J22	JUNCTION	82.24	1.50	0.0	
J23	JUNCTION	82.21	1.50	0.0	
J24	JUNCTION	82.21	1.50	0.0	
J25	JUNCTION	82.24	1.50	0.0	
J26	JUNCTION	82.24	1.50	0.0	
J27	JUNCTION	82.18	1.50	0.0	
J28	JUNCTION	82.18	1.50	0.0	
J29	JUNCTION	82.19	1.50	0.0	
J3	JUNCTION	80.60	1.00	0.0	
J30	JUNCTION	82.19	1.50	0.0	
J31	JUNCTION	82.80	1.50	0.0	
J32	JUNCTION	82.80	1.50	0.0	
J33	JUNCTION	82.19	1.50	0.0	
J34	JUNCTION	82.19	1.50	0.0	
J35	JUNCTION	81.88	1.50	0.0	
J36	JUNCTION	81.88	1.50	0.0	

J4	JUNCTION	83.74	1.50	0.0
J5	JUNCTION	82.29	1.00	0.0
J6	JUNCTION	81.52	1.00	0.0
J7	JUNCTION	80.64	1.00	0.0
J8	JUNCTION	83.86	1.50	0.0
J9	JUNCTION	82.14	1.50	0.0
BerryMunDrain	OUTFALL	82.06	0.30	0.0
CrowderMunDrain	OUTFALL	80.00	0.00	0.0
FergusonMunDrain	OUTFALL	81.85	0.30	0.0
SU1	STORAGE	80.00	3.00	0.0

****
Link Summary
****

Name	From Node	To Node	Type	Length	% Slope	Roughness
C1	J1	J2	CONDUIT	135.3	0.4997	0.0350
C10_1	J10	J4	CONDUIT	67.2	0.3006	0.0350
C10_2	J18	J11	CONDUIT	79.4	0.3275	0.0350
C11_1	J11	J19	CONDUIT	116.9	0.5997	0.0350
C11_3	J20	J23	CONDUIT	97.6	0.5820	0.0350
C11_4	J24	J12	CONDUIT	30.1	0.7019	0.0350
C12_1	J13	J27	CONDUIT	229.4	0.7307	0.0350
C12_2	J28	J14	CONDUIT	17.8	0.4891	0.0350
C13_1	J15	J29	CONDUIT	279.5	0.2966	0.0350
C13_2	J30	J14	CONDUIT	18.4	0.5011	0.0350
C14_1	J15	J31	CONDUIT	71.8	0.3007	0.0350
C14_2	J32	J16	CONDUIT	78.7	0.3278	0.0350
C15_1	J16	J33	CONDUIT	117.5	0.3003	0.0350
C15_3	J34	J35	CONDUIT	97.6	0.3216	0.0350
C15_4	J36	J17	CONDUIT	27.7	0.3748	0.0350
C17	J17	FergusonMunDrain	CONDUIT	8.4	0.5968	0.0100
C19	J9	J14	CONDUIT	13.7	0.2982	0.0130
C2	J2	J3	CONDUIT	168.2	0.5001	0.0350
C20	J14	BerryMunDrain	CONDUIT	13.2	0.3020	0.0130
C3	J3	SU1	CONDUIT	119.2	0.5001	0.0350

```
  C4                J5                J6                CONDUIT          153.8
0.5001    0.0350
  C5                J6                J7                CONDUIT          176.2
0.5001    0.0350
  C6                J7                SU1               CONDUIT          127.4
0.4999    0.0350
  C7                J12               J17               CONDUIT           13.9
0.7203    0.0100
  C8                J8                J25               CONDUIT          225.6
0.7186    0.0350
  C8_2              J26               J9                CONDUIT           20.1
0.5015    0.0350
  C9_1              J10               J21               CONDUIT          285.7
0.5946    0.0350
  C9_2              J22               J9                CONDUIT           17.6
0.5973    0.0350
  C16               SU1               CrowderMunDrain   ORIFICE
  W1                J4                J18               WEIR
  W10               J35               J36               WEIR
  W2                J19               J20               WEIR
  W3                J21               J22               WEIR
  W4                J23               J24               WEIR
  W5                J25               J26               WEIR
  W6                J27               J28               WEIR
  W7                J29               J30               WEIR
  W8                J31               J32               WEIR
  W9                J33               J34               WEIR


  *********************
  Cross Section Summary
  *********************
                                        Full     Full     Hyd.     Max.   No. of
Full
  Conduit           Shape               Depth     Area     Rad.    Width  Barrels
Flow
  ---------------------------------------------------------------------------------
------
  C1                TRAPEZOIDAL          1.00     4.00     0.55     7.00        1
5.40
  C10_1             TRAPEZOIDAL          1.50     9.75     0.85    11.00        1
13.69
  C10_2             TRAPEZOIDAL          1.50     9.75     0.85    11.00        1
14.29
  C11_1             TRAPEZOIDAL          1.50     9.75     0.85    11.00        1
19.34
  C11_3             TRAPEZOIDAL          1.50     9.75     0.85    11.00        1
19.05
  C11_4             TRAPEZOIDAL          1.50     9.75     0.85    11.00        1
20.93
  C12_1             TRAPEZOIDAL          1.50     9.75     0.85    11.00        1
21.35
  C12_2             TRAPEZOIDAL          1.50     9.75     0.85    11.00        1
17.47
  C13_1             TRAPEZOIDAL          1.50     9.75     0.85    11.00        1
13.60
  C13_2             TRAPEZOIDAL          1.50     9.75     0.85    11.00        1
17.68
  C14_1             TRAPEZOIDAL          1.50     9.75     0.85    11.00        1
13.70
```

```
  C14_2            TRAPEZOIDAL          1.50     9.75     0.85    11.00        1
14.30
  C15_1            TRAPEZOIDAL          1.50     9.75     0.85    11.00        1
13.69
  C15_3            TRAPEZOIDAL          1.50     9.75     0.85    11.00        1
14.17
  C15_4            TRAPEZOIDAL          1.50     9.75     0.85    11.00        1
15.29
  C17              CIRCULAR             0.30     0.07     0.07     0.30        1
0.10
  C19              CIRCULAR             0.30     0.07     0.07     0.30        1
0.05
  C2               TRAPEZOIDAL          1.00     4.00     0.55     7.00        1
5.40
  C20              CIRCULAR             0.30     0.07     0.07     0.30        1
0.05
  C3               TRAPEZOIDAL          1.00     4.00     0.55     7.00        1
5.40
  C4               TRAPEZOIDAL          1.00     4.00     0.55     7.00        1
5.40
  C5               TRAPEZOIDAL          1.00     4.00     0.55     7.00        1
5.40
  C6               TRAPEZOIDAL          1.00     4.00     0.55     7.00        1
5.40
  C7               CIRCULAR             0.30     0.07     0.07     0.30        1
0.11
  C8               TRAPEZOIDAL          1.50     9.75     0.85    11.00        1
21.17
  C8_2             TRAPEZOIDAL          1.50     9.75     0.85    11.00        1
17.69
  C9_1             TRAPEZOIDAL          1.50     9.75     0.85    11.00        1
19.26
  C9_2             TRAPEZOIDAL          1.50     9.75     0.85    11.00        1
19.30


  ****************
  Analysis Options
  ****************
  Flow Units ............... CMS
  Process Models:
    Rainfall/Runoff ........ YES
    RDII ................... NO
    Snowmelt ............... NO
    Groundwater ............ NO
    Flow Routing ........... YES
    Ponding Allowed ........ NO
    Water Quality .......... NO
  Infiltration Method ...... HORTON
  Flow Routing Method ...... DYNWAVE
  Surcharge Method ......... EXTRAN
  Starting Date ............ 01/27/2025 00:00:00
  Ending Date .............. 01/28/2025 00:00:00
  Antecedent Dry Days ...... 0.0
  Report Time Step ......... 00:01:00
  Wet Time Step ............ 00:05:00
  Dry Time Step ............ 00:05:00
  Routing Time Step ........ 5.00 sec
  Variable Time Step ....... YES
```

```
Maximum Trials ........... 8
Number of Threads ........ 8
Head Tolerance ........... 0.001500 m

**************************        Volume         Depth
Runoff Quantity Continuity     hectare-m            mm
**************************     ---------       -------
Total Precipitation ......         5.484        98.400
Evaporation Loss .........         0.000         0.000
Infiltration Loss ........         1.845        33.095
Surface Runoff ...........         2.687        48.200
Final Storage ............         0.959        17.210
Continuity Error (%) .....        -0.106

**************************        Volume        Volume
Flow Routing Continuity        hectare-m      10^6 ltr
**************************     ---------     ---------
Dry Weather Inflow .......         0.000         0.000
Wet Weather Inflow .......         2.685        26.851
Groundwater Inflow .......         0.000         0.000
RDII Inflow ..............         0.000         0.000
External Inflow ..........         0.000         0.000
External Outflow .........         1.943        19.430
Flooding Loss ............         0.210         2.104
Evaporation Loss .........         0.000         0.000
Exfiltration Loss ........         0.000         0.000
Initial Stored Volume ....         0.000         0.000
Final Stored Volume ......         0.586         5.856
Continuity Error (%) .....        -2.003

*************************
Highest Continuity Errors
*************************
Node J29 (100.00%)
Node J32 (93.90%)
Node J33 (89.11%)
Node J18 (73.32%)
Node J31 (57.69%)

***************************
Time-Step Critical Elements
***************************
Link C17 (61.18%)

********************************
Highest Flow Instability Indexes
********************************
All links are stable.

*********************************
Most Frequent Nonconverging Nodes
```

```
  ********************************
  Convergence obtained at all time steps.


  ************************
  Routing Time Step Summary
  ************************
  Minimum Time Step           :     0.50 sec
  Average Time Step           :     3.34 sec
  Maximum Time Step           :     5.00 sec
  % of Time in Steady State   :     0.00
  Average Iterations per Step :     2.00
  % of Steps Not Converging   :     0.00
  Time Step Frequencies       :
      5.000 -  3.155 sec      :    37.83 %
      3.155 -  1.991 sec      :    53.38 %
      1.991 -  1.256 sec      :     8.76 %
      1.256 -  0.792 sec      :     0.02 %
      0.792 -  0.500 sec      :     0.02 %


  ***************************
  Subcatchment Runoff Summary
  ***************************

  ---------------------------------------------------------------------------------
---------------------------------------------
                            Total      Total      Total      Total     Imperv
Perv      Total       Total     Peak  Runoff
                           Precip      Runon       Evap      Infil     Runoff
Runoff     Runoff      Runoff   Runoff   Coeff
  Subcatchment                 mm         mm         mm         mm         mm
mm         mm    10^6 ltr      CMS
  ---------------------------------------------------------------------------------
---------------------------------------------
  101                       98.40       0.00       0.00       8.92      77.86
8.71      86.57        2.16     0.68   0.880
  102                       98.40       0.00       0.00      10.32      74.94
10.15      85.10        1.76     0.56   0.865
  103                       98.40       0.00       0.00      11.28      73.02
10.96      83.98        1.75     0.54   0.853
  104                       98.40       0.00       0.00      12.80      69.98
12.44      82.42        1.78     0.56   0.838
  105                       98.40       0.00       0.00      22.39      48.12
23.08      71.21        2.46     0.63   0.724
  106                       98.40       0.00       0.00      34.40      18.21
41.19      59.40        0.32     0.12   0.604
  107                       98.40       0.00       0.00      32.61      21.70
39.76      61.46        0.26     0.10   0.625
  108                       98.40       0.00       0.00      32.18      19.24
42.43      61.66        0.37     0.14   0.627
  109                       98.40       0.00       0.00      30.37      23.32
40.45      63.77        0.28     0.11   0.648
  110                       98.40       0.00       0.00      36.41      21.50
36.11      57.61        0.15     0.06   0.585
  111                       98.40       0.00       0.00      34.65      25.12
34.50      59.62        0.12     0.05   0.606
  112                       98.40       0.00       0.00      33.62      23.97
36.66      60.62        0.23     0.09   0.616
```

```
  113                       98.40       0.00       0.00      32.77      24.98
36.52      61.50        0.21     0.09   0.625
  EXT-1                     98.40       0.00       0.00      44.46       4.84
42.31      47.15        0.26     0.05   0.479
  EXT-2                     98.40       0.00       0.00      44.46       4.84
42.76      47.60        0.17     0.04   0.484
  EXT-3                     98.40       0.00       0.00      43.55       4.84
33.22      38.06        1.84     0.12   0.387
  EXT-4                     98.40       0.00       0.00      35.41       4.84
34.39      39.22        4.84     0.29   0.399
  EXT-5                     98.40       0.00       0.00      37.25       4.88
27.02      31.90        4.01     0.26   0.324
  EXT-6                     98.40       0.00       0.00      44.46       4.84
40.49      45.33        0.51     0.05   0.461
  EXT-7                     98.40       0.00       0.00      42.43       7.49
32.25      39.74        3.38     0.29   0.404


  ******************
  Node Depth Summary
  ******************
```

Node	Type	Average Depth Meters	Maximum Depth Meters	Maximum HGL Meters	Time of Max Occurrence days hr:min	Reported Max Depth Meters
J1	JUNCTION	0.05	0.35	82.46	0 11:56	0.35
J10	JUNCTION	0.07	0.23	84.17	0 12:00	0.23
J11	JUNCTION	0.43	0.69	84.17	0 13:24	0.69
J12	JUNCTION	0.11	0.25	82.25	0 14:31	0.25
J13	JUNCTION	0.04	0.28	84.14	0 11:58	0.28
J14	JUNCTION	0.66	1.38	83.48	0 12:23	1.38
J15	JUNCTION	0.02	0.13	83.15	0 12:01	0.13
J16	JUNCTION	0.16	0.28	82.82	1 00:00	0.28
J17	JUNCTION	0.19	0.38	82.15	0 14:33	0.38
J18	JUNCTION	0.25	0.43	84.17	0 13:25	0.43
J19	JUNCTION	0.99	1.39	84.17	0 13:23	1.39
J2	JUNCTION	0.08	0.54	81.98	0 11:57	0.54
J20	JUNCTION	0.46	0.78	83.56	0 14:28	0.78
J21	JUNCTION	0.98	1.47	83.71	0 13:48	1.47
J22	JUNCTION	0.91	1.40	83.64	0 12:53	1.40
J23	JUNCTION	0.83	1.35	83.56	0 14:27	1.35
J24	JUNCTION	0.05	0.10	82.31	0 14:27	0.10
J25	JUNCTION	0.94	1.42	83.66	0 13:23	1.42
J26	JUNCTION	0.91	1.40	83.64	0 12:54	1.40
J27	JUNCTION	0.95	1.50	83.68	0 12:04	1.50
J28	JUNCTION	0.59	1.29	83.48	0 12:23	1.29
J29	JUNCTION	0.48	0.79	82.98	1 00:00	0.79
J3	JUNCTION	0.31	0.69	81.28	0 13:27	0.69
J30	JUNCTION	0.59	1.29	83.48	0 12:23	1.29
J31	JUNCTION	0.18	0.35	83.15	0 12:01	0.35
J32	JUNCTION	0.00	0.02	82.82	1 00:00	0.02
J33	JUNCTION	0.41	0.63	82.82	1 00:00	0.63
J34	JUNCTION	0.00	0.00	82.19	0 00:00	0.00
J35	JUNCTION	0.00	0.00	81.88	0 00:00	0.00
J36	JUNCTION	0.13	0.28	82.15	0 14:33	0.28
J4	JUNCTION	0.25	0.44	84.18	0 12:01	0.44

```
  J5                   JUNCTION     0.05     0.35    82.64     0  11:56        0.35
  J6                   JUNCTION     0.07     0.51    82.03     0  11:57        0.51
  J7                   JUNCTION     0.28     0.64    81.28     0  13:27        0.64
  J8                   JUNCTION     0.04     0.16    84.02     0  12:00        0.16
  J9                   JUNCTION     0.99     1.50    83.64     0  12:53        1.50
  BerryMunDrain        OUTFALL      0.21     0.30    82.36     0  11:59        0.30
  CrowderMunDrain      OUTFALL      0.00     0.00    80.00     0  00:00        0.00
  FergusonMunDrain     OUTFALL      0.11     0.25    82.10     0  14:33        0.25
  SU1                  STORAGE      0.74     1.28    81.28     0  13:27        1.28


  *******************
  Node Inflow Summary
  *******************

  -------------------------------------------------------------------------------
----------------
                                   Maximum  Maximum                  Lateral
Total        Flow
                                   Lateral    Total  Time of Max      Inflow
Inflow     Balance
                                    Inflow   Inflow   Occurrence      Volume
Volume       Error
  Node                 Type           CMS      CMS  days hr:min    10^6 ltr    10^6
ltr     Percent
  -------------------------------------------------------------------------------
----------------
  J1                   JUNCTION     0.537    0.537     0  11:54        1.75
1.75       0.097
  J10                  JUNCTION     0.501    0.501     0  11:54        5.04
5.06       0.315
  J11                  JUNCTION     0.380    0.380     0  11:54         3.6
3.62       7.440
  J12                  JUNCTION     0.000    0.103     0  14:27           0
2.43       0.201
  J13                  JUNCTION     0.732    0.732     0  11:54        2.71
2.71      -0.380
  J14                  JUNCTION     0.000    0.400     0  12:03           0
10.2       0.658
  J15                  JUNCTION     0.162    0.162     0  11:54       0.409
0.424      -1.168
  J16                  JUNCTION     0.086    0.086     0  11:54       0.215
0.231      54.451
  J17                  JUNCTION     0.000    0.103     0  14:30           0
2.43       0.388
  J18                  JUNCTION     0.000    0.054     0  11:54           0
0.0623     274.763
  J19                  JUNCTION     0.000    0.171     0  11:54           0
3.3      13.393
  J2                   JUNCTION     0.713    1.218     0  11:55        2.43
4.18      -0.267
  J20                  JUNCTION     0.000    0.113     0  13:23           0
2.91       6.019
  J21                  JUNCTION     0.000    0.440     0  12:00           0
5      22.996
  J22                  JUNCTION     0.000    0.129     0  13:48           0
4.14       1.432
  J23                  JUNCTION     0.000    0.106     0  14:10           0
2.75      13.257
```

```
  J24                  JUNCTION     0.000    0.103     0  14:27           0
2.43       0.071
  J25                  JUNCTION     0.000    0.249     0  12:00           0
2.5      37.857
  J26                  JUNCTION     0.000    0.113     0  12:38           0
2.07       3.356
  J27                  JUNCTION     0.000    0.687     0  11:58           0
2.72      34.700
  J28                  JUNCTION     0.000    0.404     0  12:04           0
2.02       1.388
  J29                  JUNCTION     0.000    0.117     0  12:01           0
0.429  428732.856 ltr
  J3                   JUNCTION     0.000    1.229     0  11:58           0
4.19       0.356
  J30                  JUNCTION     0.000    0.065     0  12:00           0
0.101      40.692
  J31                  JUNCTION     0.000    0.018     0  11:53           0
0.0357     136.344
  J32                  JUNCTION     0.000    0.000     0  20:03           0
0.00189    1539.142
  J33                  JUNCTION     0.000    0.073     0  11:58           0
0.148     818.149
  J34                  JUNCTION     0.000    0.000     0  00:00           0
0       0.000 ltr
  J35                  JUNCTION     0.000    0.000     0  00:00           0
0       0.000 ltr
  J36                  JUNCTION     0.000    0.018     0  13:40           0
0.0115      92.971
  J4                   JUNCTION     0.000    0.032     0  11:53           0
0.0458     120.554
  J5                   JUNCTION     0.560    0.560     0  11:54        1.78
1.78       0.108
  J6                   JUNCTION     0.556    1.077     0  11:55        1.76
3.54      -0.284
  J7                   JUNCTION     0.000    1.081     0  11:59           0
3.55       0.352
  J8                   JUNCTION     0.264    0.264     0  11:54        2.33
2.33      -0.142
  J9                   JUNCTION     0.289    0.344     0  13:32        4.83
10.7       1.300
  BerryMunDrain        OUTFALL      0.000    0.281     0  12:23           0
10       0.000
  CrowderMunDrain      OUTFALL      0.000    0.151     0  13:27           0
6.99       0.000
  FergusonMunDrain     OUTFALL      0.000    0.103     0  14:33           0
2.41       0.000
  SU1                  STORAGE      0.000    2.236     0  12:01           0
7.71       2.704


  **********************
  Node Surcharge Summary
  **********************

  Surcharging occurs when water rises above the top of the highest conduit.
  ---------------------------------------------------------------------
                                                Max. Height   Min. Depth
                                     Hours       Above Crown    Below Rim
  Node                 Type      Surcharged         Meters       Meters
```

J27	JUNCTION	0.05	0.000	0.000
J9	JUNCTION	6.88	0.000	0.000

****
Node Flooding Summary
****

Flooding refers to all water that overflows a node, whether it ponds or not.

Node	Hours Flooded	Maximum Rate CMS	Time of Max Occurrence days hr:min	Total Flood Volume 10^6 ltr	Maximum Ponded Depth Meters
J27	0.05	0.115	0 12:04	0.009	0.000
J9	6.86	0.189	0 13:18	2.095	0.000

****
Storage Volume Summary
****

Storage Unit	Average Volume 1000 m³	Avg Pcnt Full	Evap Pcnt Loss	Exfil Pcnt Loss	Maximum Volume 1000 m³	Max Pcnt Full	Time of Max Occurrence days hr:min	Maximum Outflow CMS
SU1	1.115	8.3	0.0	0.0	2.449	18.3	0 13:27	0.151

****
Outfall Loading Summary
****

Outfall Node	Flow Freq Pcnt	Avg Flow CMS	Max Flow CMS	Total Volume 10^6 ltr
BerryMunDrain	94.42	0.159	0.281	10.031
CrowderMunDrain	93.74	0.105	0.151	6.993
FergusonMunDrain	61.30	0.067	0.103	2.405
System	83.15	0.331	0.489	19.429

****
Link Flow Summary
****

Link	Type	Maximum |Flow| CMS	Time of Max Occurrence days	hr:min	Maximum |Veloc| m/sec	Max/ Full Flow	Max/ Full Depth
C1	CONDUIT	0.520	0	11:56	0.51	0.10	0.44
C10_1	CONDUIT	0.032	0	11:53	0.06	0.00	0.22
C10_2	CONDUIT	0.054	0	11:54	0.11	0.00	0.37
C11_1	CONDUIT	0.171	0	11:54	0.06	0.01	0.69
C11_3	CONDUIT	0.106	0	14:10	0.31	0.01	0.71
C11_4	CONDUIT	0.103	0	14:27	0.25	0.00	0.11
C12_1	CONDUIT	0.687	0	11:58	0.19	0.03	0.58
C12_2	CONDUIT	0.369	0	12:08	0.11	0.02	0.89
C13_1	CONDUIT	0.117	0	12:01	0.26	0.01	0.27
C13_2	CONDUIT	0.065	0	12:00	0.03	0.00	0.89
C14_1	CONDUIT	0.018	0	11:53	0.04	0.00	0.16
C14_2	CONDUIT	0.000	0	20:03	0.00	0.00	0.10
C15_1	CONDUIT	0.073	0	11:58	0.12	0.01	0.30
C15_3	CONDUIT	0.000	0	00:00	0.00	0.00	0.00
C15_4	CONDUIT	0.018	0	13:40	0.10	0.00	0.22
C17	CONDUIT	0.103	0	14:33	1.64	1.06	0.84
C19	CONDUIT	0.203	0	19:58	2.87	3.84	1.00
C2	CONDUIT	1.229	0	11:58	0.93	0.23	0.52
C20	CONDUIT	0.281	0	12:23	3.98	5.29	1.00
C3	CONDUIT	1.194	0	12:01	0.59	0.22	0.84
C4	CONDUIT	0.537	0	11:56	0.55	0.10	0.43
C5	CONDUIT	1.081	0	11:59	0.90	0.20	0.49
C6	CONDUIT	1.042	0	12:01	0.52	0.19	0.82
C7	CONDUIT	0.103	0	14:30	1.66	0.97	0.83
C8	CONDUIT	0.249	0	12:00	0.22	0.01	0.50
C8_2	CONDUIT	0.113	0	12:38	0.02	0.01	0.97
C9_1	CONDUIT	0.440	0	12:00	0.25	0.02	0.53
C9_2	CONDUIT	0.129	0	13:48	0.02	0.01	0.97
C16	ORIFICE	0.151	0	13:27			1.00
W1	WEIR	0.000	0	00:00			0.00
W10	WEIR	0.000	0	00:00			0.00
W2	WEIR	0.113	0	13:23			0.83
W3	WEIR	0.129	0	13:48			1.00
W4	WEIR	0.103	0	14:27			0.78
W5	WEIR	0.108	0	12:38			1.00
W6	WEIR	0.404	0	12:04			1.00
W7	WEIR	0.036	0	12:23			0.39
W8	WEIR	0.000	0	00:00			0.00
W9	WEIR	0.000	0	00:00			0.00

****
Flow Classification Summary
****

	Adjusted /Actual	---------- Fraction of Time in Flow Class ------- Up	Down	Sub	Sup	Up	Down	Norm	Inlet

Conduit	Length	Dry	Dry	Dry	Crit	Crit	Crit	Crit	Ltd	Ctrl
C1	1.00	0.06	0.00	0.00	0.94	0.00	0.00	0.00	0.92	0.00
C10_1	1.00	0.06	0.00	0.00	0.94	0.00	0.00	0.00	0.15	0.00
C10_2	1.00	0.00	0.49	0.00	0.51	0.00	0.00	0.00	0.00	0.00
C11_1	1.00	0.00	0.00	0.00	1.00	0.00	0.00	0.00	0.41	0.00
C11_3	1.00	0.50	0.00	0.00	0.50	0.00	0.00	0.00	0.02	0.00
C11_4	1.00	0.56	0.00	0.00	0.44	0.00	0.00	0.00	0.43	0.00
C12_1	1.00	0.06	0.00	0.00	0.94	0.00	0.00	0.00	0.90	0.00
C12_2	1.00	0.07	0.39	0.00	0.55	0.00	0.00	0.00	0.00	0.00
C13_1	1.00	0.06	0.00	0.00	0.94	0.00	0.00	0.00	0.84	0.00
C13_2	1.00	0.07	0.39	0.00	0.54	0.00	0.00	0.00	0.00	0.00
C14_1	1.00	0.06	0.00	0.00	0.94	0.00	0.00	0.00	0.38	0.00
C14_2	1.00	0.06	0.77	0.00	0.17	0.00	0.00	0.00	0.00	0.00
C15_1	1.00	0.06	0.00	0.00	0.94	0.00	0.00	0.00	0.38	0.00
C15_3	1.00	1.00	0.00	0.00	0.00	0.00	0.00	0.00	0.00	0.00
C15_4	1.00	0.56	0.00	0.00	0.43	0.00	0.00	0.00	0.00	0.00
C17	1.00	0.57	0.00	0.00	0.06	0.38	0.00	0.00	0.22	0.00
C19	1.00	0.06	0.00	0.00	0.92	0.02	0.00	0.00	0.23	0.00
C2	1.00	0.06	0.00	0.00	0.94	0.00	0.00	0.00	0.50	0.00
C20	1.00	0.07	0.00	0.00	0.93	0.00	0.00	0.00	0.00	0.00
C3	1.00	0.07	0.00	0.00	0.93	0.00	0.00	0.00	0.42	0.00
C4	1.00	0.06	0.00	0.00	0.94	0.00	0.00	0.00	0.91	0.00
C5	1.00	0.06	0.00	0.00	0.94	0.00	0.00	0.00	0.50	0.00
C6	1.00	0.07	0.00	0.00	0.93	0.00	0.00	0.00	0.44	0.00
C7	1.00	0.56	0.00	0.00	0.01	0.41	0.00	0.02	0.00	0.00
C8	1.00	0.06	0.00	0.00	0.94	0.00	0.00	0.00	0.89	0.00
C8_2	1.00	0.06	0.40	0.00	0.54	0.00	0.00	0.00	0.00	0.00
C9_1	1.00	0.06	0.00	0.00	0.94	0.00	0.00	0.00	0.89	0.00
C9_2	1.00	0.06	0.40	0.00	0.53	0.00	0.00	0.00	0.00	0.00

****
Conduit Surcharge Summary
****

Conduit	Hours Full Both Ends	Hours Full Upstream	Hours Full Dnstream	Hours Above Full Normal Flow	Hours Capacity Limited
C12_1	0.01	0.01	0.05	0.01	0.01
C17	0.01	0.01	0.01	1.06	0.01
C19	12.14	12.23	12.14	11.96	11.79
C20	12.01	12.14	12.01	12.25	12.01
C3	0.01	0.01	7.09	0.01	0.01
C6	0.01	0.01	7.09	0.01	0.01
C8_2	0.01	0.01	6.86	0.01	0.01
C9_2	0.01	0.01	6.86	0.01	0.01

Analysis begun on: Fri Feb 21 12:08:29 2025
Analysis ended on: Fri Feb 21 12:08:30 2025
Total elapsed time: 00:00:01

50 yr - SCS Type II 24 hr storm

```
  EPA STORM WATER MANAGEMENT MODEL - VERSION 5.2 (Build 5.2.4)
  ------------------------------------------------------------


  *************
  Element Count
  *************
  Number of rain gages ...... 8
  Number of subcatchments ... 20
  Number of nodes ........... 40
  Number of links ........... 39
  Number of pollutants ...... 0
  Number of land uses ....... 0


  ****************
  Raingage Summary
  ****************
                                                        Data       Recording
  Name                  Data Source                     Type       Interval
  ---------------------------------------------------------------------------
  100yr_SCS_Type_II_12hr 100yr_SCS_Type_II_12hr          INTENSITY    6 min.
  100yr_SCS_Type_II_24hr 100yr_SCS_Type_II_24hr          INTENSITY    6 min.
  10yr_SCS_Type_II_24hr 10yr_SCS_Type_II_24hr           INTENSITY    6 min.
  25mm_WQ_Chicago_4h   25mm_WQ_Chicago_4h               INTENSITY   10 min.
  25yr_SCS_Type_II_24hr 25yr_SCS_Type_II_24hr           INTENSITY    6 min.
  2yr_SCS_Type_II_24hr 2yr_SCS_Type_II_24hr            INTENSITY    6 min.
  50yr_SCS_Type_II_24hr 50yr_SCS_Type_II_24hr           INTENSITY    6 min.
  5yr_SCS_Type_II_24hr 5yr_SCS_Type_II_24hr            INTENSITY    6 min.


  ********************
  Subcatchment Summary
  ********************
  Name                        Area     Width   %Imperv    %Slope Rain Gage
Outlet
  ---------------------------------------------------------------------------------
--------------------------
  101                         2.50    188.38     80.94    1.0000
50yr_SCS_Type_II_24hr J2
  102                         2.06    168.48     77.85    1.0000
50yr_SCS_Type_II_24hr J6
  103                         2.08    152.14     75.89    1.0000
50yr_SCS_Type_II_24hr J1
  104                         2.16    180.69     72.65    1.0000
50yr_SCS_Type_II_24hr J5
  105                         3.45    193.41     49.97    1.0000
50yr_SCS_Type_II_24hr J13
  106                         0.54    438.19     18.82    1.0000
50yr_SCS_Type_II_24hr J8
  107                         0.42    460.87     22.40    1.0000
50yr_SCS_Type_II_24hr J13
  108                         0.60    492.86     19.87    1.0000
50yr_SCS_Type_II_24hr J10
  109                         0.45    530.52     24.09    1.0000
50yr_SCS_Type_II_24hr J15
  110                         0.27    265.20     22.21    1.0000
50yr_SCS_Type_II_24hr J10
```

111	0.21	313.72	25.95	1.0000	50yr_SCS_Type_II_24hr J15
112	0.37	548.02	24.74	1.0000	50yr_SCS_Type_II_24hr J11
113	0.35	523.97	25.80	1.0000	50yr_SCS_Type_II_24hr J16
EXT-1	0.56	70.08	5.00	1.1380	50yr_SCS_Type_II_24hr J2
EXT-2	0.36	57.70	5.00	1.3800	50yr_SCS_Type_II_24hr J8
EXT-3	4.83	135.00	5.00	0.2270	50yr_SCS_Type_II_24hr J8
EXT-4	12.34	211.38	5.00	0.2040	50yr_SCS_Type_II_24hr J9
EXT-5	12.58	219.50	5.05	0.0810	50yr_SCS_Type_II_24hr J10
EXT-6	1.12	91.50	5.00	0.4810	50yr_SCS_Type_II_24hr J10
EXT-7	8.50	225.46	7.72	0.2430	50yr_SCS_Type_II_24hr J11

****
Node Summary
****

Name	Type	Invert Elev.	Max. Depth	Ponded Area	External Inflow
J1	JUNCTION	82.11	1.00	0.0	
J10	JUNCTION	83.94	1.50	0.0	
J11	JUNCTION	83.48	1.50	0.0	
J12	JUNCTION	82.00	1.50	0.0	
J13	JUNCTION	83.86	1.50	0.0	
J14	JUNCTION	82.10	1.50	0.0	
J15	JUNCTION	83.02	1.50	0.0	
J16	JUNCTION	82.54	1.50	0.0	
J17	JUNCTION	81.77	1.50	0.0	
J18	JUNCTION	83.74	1.50	0.0	
J19	JUNCTION	82.78	1.50	0.0	
J2	JUNCTION	81.44	1.00	0.0	
J20	JUNCTION	82.78	1.50	0.0	
J21	JUNCTION	82.24	1.50	0.0	
J22	JUNCTION	82.24	1.50	0.0	
J23	JUNCTION	82.21	1.50	0.0	
J24	JUNCTION	82.21	1.50	0.0	
J25	JUNCTION	82.24	1.50	0.0	
J26	JUNCTION	82.24	1.50	0.0	
J27	JUNCTION	82.18	1.50	0.0	
J28	JUNCTION	82.18	1.50	0.0	
J29	JUNCTION	82.19	1.50	0.0	
J3	JUNCTION	80.60	1.00	0.0	
J30	JUNCTION	82.19	1.50	0.0	
J31	JUNCTION	82.80	1.50	0.0	
J32	JUNCTION	82.80	1.50	0.0	
J33	JUNCTION	82.19	1.50	0.0	
J34	JUNCTION	82.19	1.50	0.0	
J35	JUNCTION	81.88	1.50	0.0	
J36	JUNCTION	81.88	1.50	0.0	

J4	JUNCTION	83.74	1.50	0.0
J5	JUNCTION	82.29	1.00	0.0
J6	JUNCTION	81.52	1.00	0.0
J7	JUNCTION	80.64	1.00	0.0
J8	JUNCTION	83.86	1.50	0.0
J9	JUNCTION	82.14	1.50	0.0
BerryMunDrain	OUTFALL	82.06	0.30	0.0
CrowderMunDrain	OUTFALL	80.00	0.00	0.0
FergusonMunDrain	OUTFALL	81.85	0.30	0.0
SU1	STORAGE	80.00	3.00	0.0

****
Link Summary
****

Name	From Node	To Node	Type	Length	% Slope	Roughness
C1	J1	J2	CONDUIT	135.3	0.4997	0.0350
C10_1	J10	J4	CONDUIT	67.2	0.3006	0.0350
C10_2	J18	J11	CONDUIT	79.4	0.3275	0.0350
C11_1	J11	J19	CONDUIT	116.9	0.5997	0.0350
C11_3	J20	J23	CONDUIT	97.6	0.5820	0.0350
C11_4	J24	J12	CONDUIT	30.1	0.7019	0.0350
C12_1	J13	J27	CONDUIT	229.4	0.7307	0.0350
C12_2	J28	J14	CONDUIT	17.8	0.4891	0.0350
C13_1	J15	J29	CONDUIT	279.5	0.2966	0.0350
C13_2	J30	J14	CONDUIT	18.4	0.5011	0.0350
C14_1	J15	J31	CONDUIT	71.8	0.3007	0.0350
C14_2	J32	J16	CONDUIT	78.7	0.3278	0.0350
C15_1	J16	J33	CONDUIT	117.5	0.3003	0.0350
C15_3	J34	J35	CONDUIT	97.6	0.3216	0.0350
C15_4	J36	J17	CONDUIT	27.7	0.3748	0.0350
C17	J17	FergusonMunDrain	CONDUIT	8.4	0.5968	0.0100
C19	J9	J14	CONDUIT	13.7	0.2982	0.0130
C2	J2	J3	CONDUIT	168.2	0.5001	0.0350
C20	J14	BerryMunDrain	CONDUIT	13.2	0.3020	0.0130
C3	J3	SU1	CONDUIT	119.2	0.5001	0.0350

```
  C4                J5                J6                CONDUIT          153.8
0.5001    0.0350
  C5                J6                J7                CONDUIT          176.2
0.5001    0.0350
  C6                J7                SU1               CONDUIT          127.4
0.4999    0.0350
  C7                J12               J17               CONDUIT           13.9
0.7203    0.0100
  C8                J8                J25               CONDUIT          225.6
0.7186    0.0350
  C8_2              J26               J9                CONDUIT           20.1
0.5015    0.0350
  C9_1              J10               J21               CONDUIT          285.7
0.5946    0.0350
  C9_2              J22               J9                CONDUIT           17.6
0.5973    0.0350
  C16               SU1               CrowderMunDrain   ORIFICE
  W1                J4                J18               WEIR
  W10               J35               J36               WEIR
  W2                J19               J20               WEIR
  W3                J21               J22               WEIR
  W4                J23               J24               WEIR
  W5                J25               J26               WEIR
  W6                J27               J28               WEIR
  W7                J29               J30               WEIR
  W8                J31               J32               WEIR
  W9                J33               J34               WEIR


  *********************
  Cross Section Summary
  *********************
                                        Full     Full     Hyd.     Max.   No. of
Full
  Conduit           Shape               Depth     Area     Rad.    Width  Barrels
Flow
  ---------------------------------------------------------------------------------
------
  C1                TRAPEZOIDAL          1.00     4.00     0.55     7.00        1
5.40
  C10_1             TRAPEZOIDAL          1.50     9.75     0.85    11.00        1
13.69
  C10_2             TRAPEZOIDAL          1.50     9.75     0.85    11.00        1
14.29
  C11_1             TRAPEZOIDAL          1.50     9.75     0.85    11.00        1
19.34
  C11_3             TRAPEZOIDAL          1.50     9.75     0.85    11.00        1
19.05
  C11_4             TRAPEZOIDAL          1.50     9.75     0.85    11.00        1
20.93
  C12_1             TRAPEZOIDAL          1.50     9.75     0.85    11.00        1
21.35
  C12_2             TRAPEZOIDAL          1.50     9.75     0.85    11.00        1
17.47
  C13_1             TRAPEZOIDAL          1.50     9.75     0.85    11.00        1
13.60
  C13_2             TRAPEZOIDAL          1.50     9.75     0.85    11.00        1
17.68
  C14_1             TRAPEZOIDAL          1.50     9.75     0.85    11.00        1
13.70
```

```
  C14_2            TRAPEZOIDAL          1.50     9.75     0.85    11.00        1
14.30
  C15_1            TRAPEZOIDAL          1.50     9.75     0.85    11.00        1
13.69
  C15_3            TRAPEZOIDAL          1.50     9.75     0.85    11.00        1
14.17
  C15_4            TRAPEZOIDAL          1.50     9.75     0.85    11.00        1
15.29
  C17              CIRCULAR             0.30     0.07     0.07     0.30        1
0.10
  C19              CIRCULAR             0.30     0.07     0.07     0.30        1
0.05
  C2               TRAPEZOIDAL          1.00     4.00     0.55     7.00        1
5.40
  C20              CIRCULAR             0.30     0.07     0.07     0.30        1
0.05
  C3               TRAPEZOIDAL          1.00     4.00     0.55     7.00        1
5.40
  C4               TRAPEZOIDAL          1.00     4.00     0.55     7.00        1
5.40
  C5               TRAPEZOIDAL          1.00     4.00     0.55     7.00        1
5.40
  C6               TRAPEZOIDAL          1.00     4.00     0.55     7.00        1
5.40
  C7               CIRCULAR             0.30     0.07     0.07     0.30        1
0.11
  C8               TRAPEZOIDAL          1.50     9.75     0.85    11.00        1
21.17
  C8_2             TRAPEZOIDAL          1.50     9.75     0.85    11.00        1
17.69
  C9_1             TRAPEZOIDAL          1.50     9.75     0.85    11.00        1
19.26
  C9_2             TRAPEZOIDAL          1.50     9.75     0.85    11.00        1
19.30


  ****************
  Analysis Options
  ****************
  Flow Units ............... CMS
  Process Models:
    Rainfall/Runoff ........ YES
    RDII ................... NO
    Snowmelt ............... NO
    Groundwater ............ NO
    Flow Routing ........... YES
    Ponding Allowed ........ NO
    Water Quality .......... NO
  Infiltration Method ...... HORTON
  Flow Routing Method ...... DYNWAVE
  Surcharge Method ......... EXTRAN
  Starting Date ............ 01/27/2025 00:00:00
  Ending Date .............. 01/28/2025 00:00:00
  Antecedent Dry Days ...... 0.0
  Report Time Step ......... 00:01:00
  Wet Time Step ............ 00:05:00
  Dry Time Step ............ 00:05:00
  Routing Time Step ........ 5.00 sec
  Variable Time Step ....... YES
```

```
Maximum Trials ........... 8
Number of Threads ........ 8
Head Tolerance ........... 0.001500 m

**************************        Volume         Depth
Runoff Quantity Continuity     hectare-m            mm
**************************     ---------       -------
Total Precipitation ......         6.020       108.000
Evaporation Loss .........         0.000         0.000
Infiltration Loss ........         1.917        34.401
Surface Runoff ...........         3.093        55.491
Final Storage ............         1.016        18.225
Continuity Error (%) .....        -0.109

**************************        Volume        Volume
Flow Routing Continuity        hectare-m      10^6 ltr
**************************     ---------     ---------
Dry Weather Inflow .......         0.000         0.000
Wet Weather Inflow .......         3.091        30.914
Groundwater Inflow .......         0.000         0.000
RDII Inflow ..............         0.000         0.000
External Inflow ..........         0.000         0.000
External Outflow .........         2.067        20.675
Flooding Loss ............         0.408         4.079
Evaporation Loss .........         0.000         0.000
Exfiltration Loss ........         0.000         0.000
Initial Stored Volume ....         0.000         0.000
Final Stored Volume ......         0.675         6.752
Continuity Error (%) .....        -1.918

*************************
Highest Continuity Errors
*************************
Node J29 (100.00%)
Node J32 (92.90%)
Node J33 (92.51%)
Node J18 (68.61%)
Node J31 (63.86%)

***************************
Time-Step Critical Elements
***************************
Link C17 (63.48%)
Link C7 (1.97%)
Link C12_2 (1.12%)

********************************
Highest Flow Instability Indexes
********************************
All links are stable.
```

```
  ********************************
  Most Frequent Nonconverging Nodes
  ********************************
  Convergence obtained at all time steps.


  *************************
  Routing Time Step Summary
  *************************
  Minimum Time Step           :     0.50 sec
  Average Time Step           :     3.07 sec
  Maximum Time Step           :     5.00 sec
  % of Time in Steady State   :     0.00
  Average Iterations per Step :     2.00
  % of Steps Not Converging   :     0.00
  Time Step Frequencies       :
      5.000 -  3.155 sec      :    33.82 %
      3.155 -  1.991 sec      :    41.80 %
      1.991 -  1.256 sec      :    23.07 %
      1.256 -  0.792 sec      :     0.70 %
      0.792 -  0.500 sec      :     0.61 %


  ****************************
  Subcatchment Runoff Summary
  ****************************

  ---------------------------------------------------------------------------------
---------------------------------------------
                            Total      Total      Total      Total     Imperv
Perv      Total       Total     Peak  Runoff
                           Precip      Runon       Evap      Infil     Runoff
Runoff     Runoff      Runoff   Runoff   Coeff
  Subcatchment                  mm         mm         mm         mm         mm
mm         mm    10^6 ltr      CMS
  ---------------------------------------------------------------------------------
---------------------------------------------
  101                      108.00       0.00       0.00       9.31      85.61
10.13      95.74        2.39     0.76   0.887
  102                      108.00       0.00       0.00      10.78      82.41
11.81      94.21        1.94     0.62   0.872
  103                      108.00       0.00       0.00      11.78      80.29
12.75      93.05        1.94     0.60   0.862
  104                      108.00       0.00       0.00      13.36      76.95
14.47      91.42        1.98     0.63   0.846
  105                      108.00       0.00       0.00      23.33      52.92
26.85      79.76        2.75     0.72   0.739
  106                      108.00       0.00       0.00      35.77      20.02
47.58      67.60        0.36     0.13   0.626
  107                      108.00       0.00       0.00      33.90      23.84
45.91      69.74        0.29     0.11   0.646
  108                      108.00       0.00       0.00      33.39      21.14
48.89      70.03        0.42     0.16   0.648
  109                      108.00       0.00       0.00      31.51      25.63
46.59      72.22        0.32     0.13   0.669
  110                      108.00       0.00       0.00      38.01      23.65
41.95      65.60        0.18     0.07   0.607
  111                      108.00       0.00       0.00      36.18      27.61
40.07      67.69        0.14     0.06   0.627
```

```
  112                     108.00       0.00       0.00      35.04      26.32
42.46      68.78        0.26     0.10   0.637
  113                     108.00       0.00       0.00      34.14      27.46
42.27      69.73        0.24     0.10   0.646
  EXT-1                   108.00       0.00       0.00      46.42       5.32
49.30      54.62        0.30     0.06   0.506
  EXT-2                   108.00       0.00       0.00      46.42       5.32
49.78      55.10        0.20     0.04   0.510
  EXT-3                   108.00       0.00       0.00      45.43       5.32
39.62      44.94        2.17     0.14   0.416
  EXT-4                   108.00       0.00       0.00      36.64       5.32
40.89      46.21        5.70     0.33   0.428
  EXT-5                   108.00       0.00       0.00      38.61       5.36
32.63      37.99        4.78     0.30   0.352
  EXT-6                   108.00       0.00       0.00      46.42       5.32
47.38      52.70        0.59     0.07   0.488
  EXT-7                   108.00       0.00       0.00      44.26       8.23
38.47      46.70        3.97     0.33   0.432


  ******************
  Node Depth Summary
  ******************
```

Node	Type	Average Depth Meters	Maximum Depth Meters	Maximum HGL Meters	Time of Max Occurrence days hr:min	Reported Max Depth Meters
J1	JUNCTION	0.05	0.37	82.48	0 11:55	0.37
J10	JUNCTION	0.08	0.25	84.19	0 12:00	0.25
J11	JUNCTION	0.46	0.72	84.20	0 13:08	0.72
J12	JUNCTION	0.14	0.37	82.37	0 14:13	0.37
J13	JUNCTION	0.04	0.30	84.16	0 11:57	0.30
J14	JUNCTION	0.71	1.43	83.53	0 12:22	1.43
J15	JUNCTION	0.04	0.15	83.16	0 12:00	0.15
J16	JUNCTION	0.19	0.31	82.86	1 00:00	0.31
J17	JUNCTION	0.23	0.44	82.22	0 14:15	0.44
J18	JUNCTION	0.27	0.46	84.20	0 13:07	0.46
J19	JUNCTION	1.04	1.42	84.20	0 13:09	1.42
J2	JUNCTION	0.09	0.57	82.00	0 11:56	0.57
J20	JUNCTION	0.50	0.81	83.59	0 14:00	0.81
J21	JUNCTION	1.05	1.50	83.74	0 12:58	1.50
J22	JUNCTION	0.96	1.40	83.64	0 12:32	1.40
J23	JUNCTION	0.89	1.37	83.59	0 14:01	1.37
J24	JUNCTION	0.06	0.17	82.38	0 14:13	0.17
J25	JUNCTION	1.00	1.44	83.68	0 13:09	1.44
J26	JUNCTION	0.96	1.40	83.64	0 12:37	1.40
J27	JUNCTION	0.99	1.50	83.68	0 12:00	1.50
J28	JUNCTION	0.63	1.34	83.53	0 12:22	1.34
J29	JUNCTION	0.60	0.91	83.10	1 00:00	0.91
J3	JUNCTION	0.40	0.77	81.36	0 13:33	0.77
J30	JUNCTION	0.63	1.34	83.53	0 12:22	1.34
J31	JUNCTION	0.21	0.36	83.16	0 12:01	0.36
J32	JUNCTION	0.01	0.05	82.86	1 00:00	0.05
J33	JUNCTION	0.45	0.67	82.86	1 00:00	0.67
J34	JUNCTION	0.00	0.00	82.19	0 00:00	0.00
J35	JUNCTION	0.00	0.00	81.88	0 00:00	0.00

J36	JUNCTION	0.16	0.34	82.22	0	14:15	0.34
J4	JUNCTION	0.27	0.45	84.19	0	12:01	0.45
J5	JUNCTION	0.05	0.37	82.66	0	11:55	0.37
J6	JUNCTION	0.08	0.54	82.06	0	11:57	0.54
J7	JUNCTION	0.37	0.73	81.36	0	13:33	0.73
J8	JUNCTION	0.05	0.18	84.04	0	12:00	0.18
J9	JUNCTION	1.05	1.50	83.64	0	12:32	1.50
BerryMunDrain	OUTFALL	0.22	0.30	82.36	0	11:57	0.30
CrowderMunDrain	OUTFALL	0.00	0.00	80.00	0	00:00	0.00
FergusonMunDrain	OUTFALL	0.14	0.27	82.12	0	14:15	0.27
SU1	STORAGE	0.85	1.36	81.36	0	13:33	1.36

****
Node Inflow Summary
****

Node	Type	Maximum Lateral Inflow CMS	Maximum Total Inflow CMS	Time of Max Occurrence days	hr:min	Lateral Inflow Volume 10^6 ltr	Total Inflow Volume 10^6 ltr	Flow Balance Error Percent
J1	JUNCTION	0.604	0.604	0	11:54	1.94	1.94	0.092
J10	JUNCTION	0.577	0.577	0	11:54	5.96	5.98	0.288
J11	JUNCTION	0.434	0.434	0	11:54	4.22	4.24	6.365
J12	JUNCTION	0.000	0.133	0	14:05	0	3.03	0.176
J13	JUNCTION	0.831	0.831	0	11:54	3.04	3.04	-0.261
J14	JUNCTION	0.000	0.428	0	12:00	0	10.5	0.732
J15	JUNCTION	0.184	0.184	0	11:54	0.464	0.48	6.953
J16	JUNCTION	0.098	0.098	0	11:54	0.243	0.255	59.533
J17	JUNCTION	0.000	0.132	0	14:12	0	3.04	0.320
J18	JUNCTION	0.000	0.057	0	11:54	0	0.0681	218.534
J19	JUNCTION	0.000	0.192	0	11:54	0	3.92	11.146
J2	JUNCTION	0.804	1.371	0	11:55	2.7	4.64	-0.323
J20	JUNCTION	0.000	0.144	0	13:09	0	3.53	4.965
J21	JUNCTION	0.000	0.510	0	12:00	0	5.92	20.959
J22	JUNCTION	0.000	0.153	0	12:59	0	4.92	1.476

```
  J23                  JUNCTION     0.000    0.136     0  13:47           0
3.36      10.700
  J24                  JUNCTION     0.000    0.134     0  14:01           0
3.04       0.060
  J25                  JUNCTION     0.000    0.292     0  12:00           0
2.89      36.606
  J26                  JUNCTION     0.000    0.164     0  12:27           0
2.36       3.604
  J27                  JUNCTION     0.000    0.779     0  11:57           0
3.05      29.802
  J28                  JUNCTION     0.000    0.404     0  12:00           0
2.25       1.444
  J29                  JUNCTION     0.000    0.135     0  12:00           0
0.527  527230.873 ltr
  J3                   JUNCTION     0.000    1.379     0  11:58           0
4.65       0.936
  J30                  JUNCTION     0.000    0.077     0  12:20           0
0.189      21.726
  J31                  JUNCTION     0.000    0.019     0  11:53           0
0.0445     176.719
  J32                  JUNCTION     0.000    0.001     0  15:36           0
0.00586    1307.968
  J33                  JUNCTION     0.000    0.084     0  11:58           0
0.154    1234.281
  J34                  JUNCTION     0.000    0.000     0  00:00           0
0       0.000 ltr
  J35                  JUNCTION     0.000    0.000     0  00:00           0
0       0.000 ltr
  J36                  JUNCTION     0.000    0.022     0  13:16           0
0.015      64.313
  J4                   JUNCTION     0.000    0.035     0  11:53           0
0.0487     112.286
  J5                   JUNCTION     0.629    0.629     0  11:54        1.98
1.98       0.104
  J6                   JUNCTION     0.624    1.209     0  11:55        1.95
3.92      -0.351
  J7                   JUNCTION     0.000    1.210     0  11:58           0
3.94       0.795
  J8                   JUNCTION     0.308    0.308     0  11:54        2.73
2.73      -0.169
  J9                   JUNCTION     0.333    0.427     0  13:06        5.69
12.7       1.336
  BerryMunDrain        OUTFALL      0.000    0.288     0  12:22           0
10.2       0.000
  CrowderMunDrain      OUTFALL      0.000    0.157     0  13:33           0
7.44       0.000
  FergusonMunDrain     OUTFALL      0.000    0.132     0  14:15           0
3.01       0.000
  SU1                  STORAGE      0.000    2.508     0  12:01           0
8.51       3.359


  **********************
  Node Surcharge Summary
  **********************

  Surcharging occurs when water rises above the top of the highest conduit.
  --------------------------------------------------------------------------
                                                Max. Height   Min. Depth
```

Node	Type	Hours Surcharged	Above Crown Meters	Below Rim Meters
J21	JUNCTION	1.12	0.000	0.000
J27	JUNCTION	0.16	0.000	0.000
J9	JUNCTION	8.83	0.000	0.000

****
Node Flooding Summary
****

Flooding refers to all water that overflows a node, whether it ponds or not.

Node	Hours Flooded	Maximum Rate CMS	Time of Max Occurrence days hr:min	Total Flood Volume 10^6 ltr	Maximum Ponded Depth Meters
J21	1.08	0.025	0 12:58	0.043	0.000
J27	0.15	0.368	0 12:00	0.105	0.000
J9	8.80	0.304	0 12:58	3.932	0.000

****
Storage Volume Summary
****

Storage Unit	Average Volume 1000 m³	Avg Pcnt Full	Evap Pcnt Loss	Exfil Pcnt Loss	Maximum Volume 1000 m³	Max Pcnt Full	Time of Max Occurrence days hr:min	Maximum Outflow CMS
SU1	1.419	10.6	0.0	0.0	2.768	20.6	0 13:33	0.157

****
Outfall Loading Summary
****

Outfall Node	Flow Freq Pcnt	Avg Flow CMS	Max Flow CMS	Total Volume 10^6 ltr
BerryMunDrain	95.24	0.168	0.288	10.226
CrowderMunDrain	94.63	0.114	0.157	7.436
FergusonMunDrain	65.41	0.084	0.132	3.014
System	85.09	0.365	0.530	20.675

****
Link Flow Summary
****

Link	Type	Maximum |Flow| CMS	Time of Max Occurrence days	hr:min	Maximum |Veloc| m/sec	Max/ Full Flow	Max/ Full Depth
C1	CONDUIT	0.584	0	11:55	0.53	0.11	0.47
C10_1	CONDUIT	0.035	0	11:53	0.06	0.00	0.24
C10_2	CONDUIT	0.057	0	11:54	0.09	0.00	0.39
C11_1	CONDUIT	0.192	0	11:54	0.06	0.01	0.71
C11_3	CONDUIT	0.136	0	13:47	0.36	0.01	0.73
C11_4	CONDUIT	0.133	0	14:05	0.26	0.01	0.18
C12_1	CONDUIT	0.779	0	11:57	0.20	0.04	0.60
C12_2	CONDUIT	0.367	0	12:13	0.11	0.02	0.93
C13_1	CONDUIT	0.135	0	12:00	0.25	0.01	0.33
C13_2	CONDUIT	0.077	0	12:20	0.03	0.00	0.92
C14_1	CONDUIT	0.019	0	11:53	0.04	0.00	0.17
C14_2	CONDUIT	0.001	0	15:36	0.00	0.00	0.12
C15_1	CONDUIT	0.084	0	11:58	0.12	0.01	0.33
C15_3	CONDUIT	0.000	0	00:00	0.00	0.00	0.00
C15_4	CONDUIT	0.022	0	13:16	0.11	0.00	0.26
C17	CONDUIT	0.132	0	14:15	1.90	1.36	0.95
C19	CONDUIT	0.203	0	21:24	2.88	3.85	1.00
C2	CONDUIT	1.379	0	11:58	0.96	0.26	0.55
C20	CONDUIT	0.288	0	12:22	4.07	5.41	1.00
C3	CONDUIT	1.341	0	12:00	0.59	0.25	0.88
C4	CONDUIT	0.604	0	11:55	0.57	0.11	0.45
C5	CONDUIT	1.210	0	11:58	0.93	0.22	0.51
C6	CONDUIT	1.168	0	12:01	0.52	0.22	0.86
C7	CONDUIT	0.132	0	14:12	1.87	1.24	1.00
C8	CONDUIT	0.292	0	12:00	0.22	0.01	0.51
C8_2	CONDUIT	0.164	0	12:27	0.02	0.01	0.97
C9_1	CONDUIT	0.510	0	12:00	0.25	0.03	0.55
C9_2	CONDUIT	0.153	0	12:58	0.02	0.01	0.97
C16	ORIFICE	0.157	0	13:33			1.00
W1	WEIR	0.000	0	00:00			0.00
W10	WEIR	0.000	0	00:00			0.00
W2	WEIR	0.144	0	13:09			0.98
W3	WEIR	0.153	0	12:59			1.00
W4	WEIR	0.134	0	14:01			0.93
W5	WEIR	0.156	0	12:27			1.00
W6	WEIR	0.404	0	12:00			1.00
W7	WEIR	0.077	0	12:22			0.64
W8	WEIR	0.000	0	00:00			0.00
W9	WEIR	0.000	0	00:00			0.00

****
Flow Classification Summary
****

```
                      Adjusted    ---------- Fraction of Time in Flow Class -------
---
                       /Actual         Up    Down  Sub   Sup   Up    Down  Norm
Inlet
  Conduit               Length    Dry  Dry   Dry   Crit  Crit  Crit  Crit  Ltd
Ctrl
  ---------------------------------------------------------------------------------
----
  C1                      1.00   0.05  0.00  0.00  0.94  0.00  0.00  0.00  0.93
0.00
  C10_1                   1.00   0.05  0.00  0.00  0.95  0.00  0.00  0.00  0.14
0.00
  C10_2                   1.00   0.00  0.49  0.00  0.51  0.00  0.00  0.00  0.00
0.00
  C11_1                   1.00   0.00  0.00  0.00  1.00  0.00  0.00  0.00  0.40
0.00
  C11_3                   1.00   0.50  0.00  0.00  0.50  0.00  0.00  0.00  0.01
0.00
  C11_4                   1.00   0.55  0.00  0.00  0.45  0.00  0.00  0.00  0.39
0.00
  C12_1                   1.00   0.05  0.00  0.00  0.95  0.00  0.00  0.00  0.91
0.00
  C12_2                   1.00   0.06  0.38  0.00  0.56  0.00  0.00  0.00  0.00
0.00
  C13_1                   1.00   0.05  0.00  0.00  0.95  0.00  0.00  0.00  0.49
0.00
  C13_2                   1.00   0.06  0.39  0.00  0.55  0.00  0.00  0.00  0.00
0.00
  C14_1                   1.00   0.05  0.00  0.00  0.95  0.00  0.00  0.00  0.37
0.00
  C14_2                   1.00   0.05  0.59  0.00  0.35  0.00  0.00  0.00  0.00
0.00
  C15_1                   1.00   0.05  0.00  0.00  0.95  0.00  0.00  0.00  0.39
0.00
  C15_3                   1.00   1.00  0.00  0.00  0.00  0.00  0.00  0.00  0.00
0.00
  C15_4                   1.00   0.55  0.00  0.00  0.45  0.00  0.00  0.00  0.00
0.00
  C17                     1.00   0.55  0.00  0.00  0.13  0.32  0.00  0.00  0.19
0.00
  C19                     1.00   0.05  0.00  0.00  0.93  0.02  0.00  0.00  0.23
0.00
  C2                      1.00   0.05  0.00  0.00  0.95  0.00  0.00  0.00  0.50
0.00
  C20                     1.00   0.06  0.00  0.00  0.94  0.00  0.00  0.00  0.00
0.00
  C3                      1.00   0.07  0.00  0.00  0.93  0.00  0.00  0.00  0.40
0.00
  C4                      1.00   0.05  0.00  0.00  0.95  0.00  0.00  0.00  0.92
0.00
  C5                      1.00   0.05  0.00  0.00  0.95  0.00  0.00  0.00  0.50
0.00
  C6                      1.00   0.07  0.00  0.00  0.93  0.00  0.00  0.00  0.40
0.00
  C7                      1.00   0.55  0.00  0.00  0.11  0.32  0.00  0.02  0.00
0.00
  C8                      1.00   0.05  0.00  0.00  0.95  0.00  0.00  0.00  0.90
0.00
  C8_2                    1.00   0.05  0.40  0.00  0.54  0.00  0.00  0.00  0.00
0.00
```

C9_1	1.00	0.05	0.00	0.00	0.95	0.00	0.00	0.00	0.89	0.00
C9_2	1.00	0.05	0.40	0.00	0.54	0.00	0.00	0.00	0.00	0.00

****
Conduit Surcharge Summary
****

Conduit	Hours Full Both Ends	Hours Full Upstream	Hours Full Dnstream	Hours Above Full Normal Flow	Hours Capacity Limited
C12_1	0.01	0.01	0.15	0.01	0.01
C17	0.01	1.10	0.01	2.99	0.01
C19	12.16	12.25	12.16	12.09	11.91
C20	12.05	12.16	12.05	12.28	12.05
C3	0.01	0.01	8.61	0.01	0.01
C6	0.01	0.01	8.61	0.01	0.01
C7	1.10	1.56	1.10	2.30	1.10
C8_2	0.01	0.01	8.80	0.01	0.01
C9_1	0.01	0.01	1.08	0.01	0.01
C9_2	0.01	0.01	8.80	0.01	0.01

Analysis begun on: Fri Feb 21 12:09:45 2025
Analysis ended on: Fri Feb 21 12:09:46 2025
Total elapsed time: 00:00:01

100 yr - SCS Type II 24 hr storm

```
  EPA STORM WATER MANAGEMENT MODEL - VERSION 5.2 (Build 5.2.4)
  ------------------------------------------------------------


  *************
  Element Count
  *************
  Number of rain gages ...... 8
  Number of subcatchments ... 20
  Number of nodes ........... 40
  Number of links ........... 39
  Number of pollutants ...... 0
  Number of land uses ....... 0


  ****************
  Raingage Summary
  ****************
                                                        Data       Recording
  Name                 Data Source                      Type       Interval
  ---------------------------------------------------------------------------
  100yr_SCS_Type_II_12hr 100yr_SCS_Type_II_12hr         INTENSITY    6 min.
  100yr_SCS_Type_II_24hr 100yr_SCS_Type_II_24hr         INTENSITY    6 min.
  10yr_SCS_Type_II_24hr 10yr_SCS_Type_II_24hr          INTENSITY    6 min.
  25mm_WQ_Chicago_4h   25mm_WQ_Chicago_4h              INTENSITY   10 min.
  25yr_SCS_Type_II_24hr 25yr_SCS_Type_II_24hr          INTENSITY    6 min.
  2yr_SCS_Type_II_24hr 2yr_SCS_Type_II_24hr           INTENSITY    6 min.
  50yr_SCS_Type_II_24hr 50yr_SCS_Type_II_24hr          INTENSITY    6 min.
  5yr_SCS_Type_II_24hr 5yr_SCS_Type_II_24hr           INTENSITY    6 min.


  ********************
  Subcatchment Summary
  ********************
  Name                        Area     Width   %Imperv    %Slope Rain Gage
Outlet
  ---------------------------------------------------------------------------------
--------------------------
  101                         2.50    188.38     80.94    1.0000
100yr_SCS_Type_II_24hr J2
  102                         2.06    168.48     77.85    1.0000
100yr_SCS_Type_II_24hr J6
  103                         2.08    152.14     75.89    1.0000
100yr_SCS_Type_II_24hr J1
  104                         2.16    180.69     72.65    1.0000
100yr_SCS_Type_II_24hr J5
  105                         3.45    193.41     49.97    1.0000
100yr_SCS_Type_II_24hr J13
  106                         0.54    438.19     18.82    1.0000
100yr_SCS_Type_II_24hr J8
  107                         0.42    460.87     22.40    1.0000
100yr_SCS_Type_II_24hr J13
  108                         0.60    492.86     19.87    1.0000
100yr_SCS_Type_II_24hr J10
  109                         0.45    530.52     24.09    1.0000
100yr_SCS_Type_II_24hr J15
  110                         0.27    265.20     22.21    1.0000
100yr_SCS_Type_II_24hr J10
```

111	0.21	313.72	25.95	1.0000	100yr_SCS_Type_II_24hr J15
112	0.37	548.02	24.74	1.0000	100yr_SCS_Type_II_24hr J11
113	0.35	523.97	25.80	1.0000	100yr_SCS_Type_II_24hr J16
EXT-1	0.56	70.08	5.00	1.1380	100yr_SCS_Type_II_24hr J2
EXT-2	0.36	57.70	5.00	1.3800	100yr_SCS_Type_II_24hr J8
EXT-3	4.83	135.00	5.00	0.2270	100yr_SCS_Type_II_24hr J8
EXT-4	12.34	211.38	5.00	0.2040	100yr_SCS_Type_II_24hr J9
EXT-5	12.58	219.50	5.05	0.0810	100yr_SCS_Type_II_24hr J10
EXT-6	1.12	91.50	5.00	0.4810	100yr_SCS_Type_II_24hr J10
EXT-7	8.50	225.46	7.72	0.2430	100yr_SCS_Type_II_24hr J11

****
Node Summary
****

Name	Type	Invert Elev.	Max. Depth	Ponded Area	External Inflow
J1	JUNCTION	82.11	1.00	0.0	
J10	JUNCTION	83.94	1.50	0.0	
J11	JUNCTION	83.48	1.50	0.0	
J12	JUNCTION	82.00	1.50	0.0	
J13	JUNCTION	83.86	1.50	0.0	
J14	JUNCTION	82.10	1.50	0.0	
J15	JUNCTION	83.02	1.50	0.0	
J16	JUNCTION	82.54	1.50	0.0	
J17	JUNCTION	81.77	1.50	0.0	
J18	JUNCTION	83.74	1.50	0.0	
J19	JUNCTION	82.78	1.50	0.0	
J2	JUNCTION	81.44	1.00	0.0	
J20	JUNCTION	82.78	1.50	0.0	
J21	JUNCTION	82.24	1.50	0.0	
J22	JUNCTION	82.24	1.50	0.0	
J23	JUNCTION	82.21	1.50	0.0	
J24	JUNCTION	82.21	1.50	0.0	
J25	JUNCTION	82.24	1.50	0.0	
J26	JUNCTION	82.24	1.50	0.0	
J27	JUNCTION	82.18	1.50	0.0	
J28	JUNCTION	82.18	1.50	0.0	
J29	JUNCTION	82.19	1.50	0.0	
J3	JUNCTION	80.60	1.00	0.0	
J30	JUNCTION	82.19	1.50	0.0	
J31	JUNCTION	82.80	1.50	0.0	
J32	JUNCTION	82.80	1.50	0.0	
J33	JUNCTION	82.19	1.50	0.0	
J34	JUNCTION	82.19	1.50	0.0	
J35	JUNCTION	81.88	1.50	0.0	
J36	JUNCTION	81.88	1.50	0.0	

J4	JUNCTION	83.74	1.50	0.0
J5	JUNCTION	82.29	1.00	0.0
J6	JUNCTION	81.52	1.00	0.0
J7	JUNCTION	80.64	1.00	0.0
J8	JUNCTION	83.86	1.50	0.0
J9	JUNCTION	82.14	1.50	0.0
BerryMunDrain	OUTFALL	82.06	0.30	0.0
CrowderMunDrain	OUTFALL	80.00	0.00	0.0
FergusonMunDrain	OUTFALL	81.85	0.30	0.0
SU1	STORAGE	80.00	3.00	0.0

****
Link Summary
****

Name	From Node	To Node	Type	Length	% Slope	Roughness
C1	J1	J2	CONDUIT	135.3	0.4997	0.0350
C10_1	J10	J4	CONDUIT	67.2	0.3006	0.0350
C10_2	J18	J11	CONDUIT	79.4	0.3275	0.0350
C11_1	J11	J19	CONDUIT	116.9	0.5997	0.0350
C11_3	J20	J23	CONDUIT	97.6	0.5820	0.0350
C11_4	J24	J12	CONDUIT	30.1	0.7019	0.0350
C12_1	J13	J27	CONDUIT	229.4	0.7307	0.0350
C12_2	J28	J14	CONDUIT	17.8	0.4891	0.0350
C13_1	J15	J29	CONDUIT	279.5	0.2966	0.0350
C13_2	J30	J14	CONDUIT	18.4	0.5011	0.0350
C14_1	J15	J31	CONDUIT	71.8	0.3007	0.0350
C14_2	J32	J16	CONDUIT	78.7	0.3278	0.0350
C15_1	J16	J33	CONDUIT	117.5	0.3003	0.0350
C15_3	J34	J35	CONDUIT	97.6	0.3216	0.0350
C15_4	J36	J17	CONDUIT	27.7	0.3748	0.0350
C17	J17	FergusonMunDrain	CONDUIT	8.4	0.5968	0.0100
C19	J9	J14	CONDUIT	13.7	0.2982	0.0130
C2	J2	J3	CONDUIT	168.2	0.5001	0.0350
C20	J14	BerryMunDrain	CONDUIT	13.2	0.3020	0.0130
C3	J3	SU1	CONDUIT	119.2	0.5001	0.0350

```
  C4                J5                J6                CONDUIT          153.8
0.5001    0.0350
  C5                J6                J7                CONDUIT          176.2
0.5001    0.0350
  C6                J7                SU1               CONDUIT          127.4
0.4999    0.0350
  C7                J12               J17               CONDUIT           13.9
0.7203    0.0100
  C8                J8                J25               CONDUIT          225.6
0.7186    0.0350
  C8_2              J26               J9                CONDUIT           20.1
0.5015    0.0350
  C9_1              J10               J21               CONDUIT          285.7
0.5946    0.0350
  C9_2              J22               J9                CONDUIT           17.6
0.5973    0.0350
  C16               SU1               CrowderMunDrain   ORIFICE
  W1                J4                J18               WEIR
  W10               J35               J36               WEIR
  W2                J19               J20               WEIR
  W3                J21               J22               WEIR
  W4                J23               J24               WEIR
  W5                J25               J26               WEIR
  W6                J27               J28               WEIR
  W7                J29               J30               WEIR
  W8                J31               J32               WEIR
  W9                J33               J34               WEIR


  *********************
  Cross Section Summary
  *********************
                                        Full     Full     Hyd.     Max.   No. of
Full
  Conduit           Shape               Depth     Area     Rad.    Width  Barrels
Flow
  ---------------------------------------------------------------------------------
------
  C1                TRAPEZOIDAL          1.00     4.00     0.55     7.00        1
5.40
  C10_1             TRAPEZOIDAL          1.50     9.75     0.85    11.00        1
13.69
  C10_2             TRAPEZOIDAL          1.50     9.75     0.85    11.00        1
14.29
  C11_1             TRAPEZOIDAL          1.50     9.75     0.85    11.00        1
19.34
  C11_3             TRAPEZOIDAL          1.50     9.75     0.85    11.00        1
19.05
  C11_4             TRAPEZOIDAL          1.50     9.75     0.85    11.00        1
20.93
  C12_1             TRAPEZOIDAL          1.50     9.75     0.85    11.00        1
21.35
  C12_2             TRAPEZOIDAL          1.50     9.75     0.85    11.00        1
17.47
  C13_1             TRAPEZOIDAL          1.50     9.75     0.85    11.00        1
13.60
  C13_2             TRAPEZOIDAL          1.50     9.75     0.85    11.00        1
17.68
  C14_1             TRAPEZOIDAL          1.50     9.75     0.85    11.00        1
13.70
```

```
  C14_2            TRAPEZOIDAL          1.50     9.75     0.85    11.00        1
14.30
  C15_1            TRAPEZOIDAL          1.50     9.75     0.85    11.00        1
13.69
  C15_3            TRAPEZOIDAL          1.50     9.75     0.85    11.00        1
14.17
  C15_4            TRAPEZOIDAL          1.50     9.75     0.85    11.00        1
15.29
  C17              CIRCULAR             0.30     0.07     0.07     0.30        1
0.10
  C19              CIRCULAR             0.30     0.07     0.07     0.30        1
0.05
  C2               TRAPEZOIDAL          1.00     4.00     0.55     7.00        1
5.40
  C20              CIRCULAR             0.30     0.07     0.07     0.30        1
0.05
  C3               TRAPEZOIDAL          1.00     4.00     0.55     7.00        1
5.40
  C4               TRAPEZOIDAL          1.00     4.00     0.55     7.00        1
5.40
  C5               TRAPEZOIDAL          1.00     4.00     0.55     7.00        1
5.40
  C6               TRAPEZOIDAL          1.00     4.00     0.55     7.00        1
5.40
  C7               CIRCULAR             0.30     0.07     0.07     0.30        1
0.11
  C8               TRAPEZOIDAL          1.50     9.75     0.85    11.00        1
21.17
  C8_2             TRAPEZOIDAL          1.50     9.75     0.85    11.00        1
17.69
  C9_1             TRAPEZOIDAL          1.50     9.75     0.85    11.00        1
19.26
  C9_2             TRAPEZOIDAL          1.50     9.75     0.85    11.00        1
19.30


  ****************
  Analysis Options
  ****************
  Flow Units ............... CMS
  Process Models:
    Rainfall/Runoff ........ YES
    RDII ................... NO
    Snowmelt ............... NO
    Groundwater ............ NO
    Flow Routing ........... YES
    Ponding Allowed ........ NO
    Water Quality .......... NO
  Infiltration Method ...... HORTON
  Flow Routing Method ...... DYNWAVE
  Surcharge Method ......... EXTRAN
  Starting Date ............ 01/27/2025 00:00:00
  Ending Date .............. 01/28/2025 00:00:00
  Antecedent Dry Days ...... 0.0
  Report Time Step ......... 00:01:00
  Wet Time Step ............ 00:05:00
  Dry Time Step ............ 00:05:00
  Routing Time Step ........ 5.00 sec
  Variable Time Step ....... YES
```

```
Maximum Trials ........... 8
Number of Threads ........ 8
Head Tolerance ........... 0.001500 m

**************************        Volume         Depth
Runoff Quantity Continuity     hectare-m            mm
**************************     ---------       -------
Total Precipitation ......         6.555       117.600
Evaporation Loss .........         0.000         0.000
Infiltration Loss ........         1.983        35.577
Surface Runoff ...........         3.510        62.983
Final Storage ............         1.069        19.171
Continuity Error (%) .....        -0.112

**************************        Volume        Volume
Flow Routing Continuity        hectare-m      10^6 ltr
**************************     ---------     ---------
Dry Weather Inflow .......         0.000         0.000
Wet Weather Inflow .......         3.509        35.088
Groundwater Inflow .......         0.000         0.000
RDII Inflow ..............         0.000         0.000
External Inflow ..........         0.000         0.000
External Outflow .........         2.184        21.840
Flooding Loss ............         0.631         6.313
Evaporation Loss .........         0.000         0.000
Exfiltration Loss ........         0.000         0.000
Initial Stored Volume ....         0.000         0.000
Final Stored Volume ......         0.755         7.555
Continuity Error (%) .....        -1.766

*************************
Highest Continuity Errors
*************************
Node J33 (96.69%)
Node J29 (95.32%)
Node J32 (92.43%)
Node J31 (64.36%)
Node J18 (62.27%)

***************************
Time-Step Critical Elements
***************************
Link C17 (67.35%)
Link C12_2 (1.45%)
Link C7 (1.35%)

********************************
Highest Flow Instability Indexes
********************************
All links are stable.
```

```
  ********************************
  Most Frequent Nonconverging Nodes
  ********************************
  Convergence obtained at all time steps.


  *************************
  Routing Time Step Summary
  *************************
  Minimum Time Step           :     0.50 sec
  Average Time Step           :     2.84 sec
  Maximum Time Step           :     5.00 sec
  % of Time in Steady State   :     0.00
  Average Iterations per Step :     2.00
  % of Steps Not Converging   :     0.00
  Time Step Frequencies       :
      5.000 -  3.155 sec      :    30.67 %
      3.155 -  1.991 sec      :    34.16 %
      1.991 -  1.256 sec      :    27.33 %
      1.256 -  0.792 sec      :     7.44 %
      0.792 -  0.500 sec      :     0.41 %


  ****************************
  Subcatchment Runoff Summary
  ****************************

  ---------------------------------------------------------------------------------
---------------------------------------------
                            Total      Total      Total      Total     Imperv
Perv      Total       Total     Peak  Runoff
                          Precip      Runon       Evap      Infil     Runoff
Runoff     Runoff      Runoff   Runoff   Coeff
  Subcatchment                 mm         mm         mm         mm         mm
mm         mm    10^6 ltr      CMS
  ---------------------------------------------------------------------------------
---------------------------------------------
  101                       117.60       0.00       0.00       9.67      93.37
11.59     104.96        2.62     0.84   0.893
  102                       117.60       0.00       0.00      11.19      89.87
13.50     103.37        2.13     0.69   0.879
  103                       117.60       0.00       0.00      12.23      87.56
14.59     102.16        2.13     0.67   0.869
  104                       117.60       0.00       0.00      13.88      83.91
16.56     100.47        2.17     0.70   0.854
  105                       117.60       0.00       0.00      24.18      57.71
30.70      88.41        3.05     0.80   0.752
  106                       117.60       0.00       0.00      37.00      21.83
54.12      75.95        0.41     0.15   0.646
  107                       117.60       0.00       0.00      35.06      25.99
52.19      78.17        0.32     0.13   0.665
  108                       117.60       0.00       0.00      34.47      23.08
55.47      78.55        0.47     0.18   0.668
  109                       117.60       0.00       0.00      32.53      27.94
52.85      80.79        0.36     0.14   0.687
  110                       117.60       0.00       0.00      39.47      25.76
47.95      73.71        0.20     0.08   0.627
  111                       117.60       0.00       0.00      37.57      30.10
45.79      75.89        0.16     0.06   0.645
```

```
  112                     117.60       0.00       0.00      36.32      28.70
48.40      77.10        0.29     0.12   0.656
  113                     117.60       0.00       0.00      35.37      29.93
48.16      78.10        0.27     0.11   0.664
  EXT-1                   117.60       0.00       0.00      48.20       5.80
56.49      62.29        0.35     0.07   0.530
  EXT-2                   117.60       0.00       0.00      48.20       5.80
57.00      62.80        0.23     0.05   0.534
  EXT-3                   117.60       0.00       0.00      47.14       5.80
46.26      52.07        2.51     0.16   0.443
  EXT-4                   117.60       0.00       0.00      37.74       5.80
47.64      53.44        6.59     0.38   0.454
  EXT-5                   117.60       0.00       0.00      39.84       5.85
38.53      44.37        5.58     0.33   0.377
  EXT-6                   117.60       0.00       0.00      48.20       5.80
54.45      60.25        0.67     0.08   0.512
  EXT-7                   117.60       0.00       0.00      45.93       8.97
44.91      53.89        4.58     0.38   0.458


  ******************
  Node Depth Summary
  ******************
```

Node	Type	Average Depth Meters	Maximum Depth Meters	Maximum HGL Meters	Time of Max Occurrence days hr:min	Reported Max Depth Meters
J1	JUNCTION	0.05	0.38	82.50	0 11:55	0.38
J10	JUNCTION	0.09	0.27	84.21	0 12:00	0.27
J11	JUNCTION	0.49	0.76	84.24	0 13:09	0.76
J12	JUNCTION	0.20	0.51	82.51	0 14:10	0.51
J13	JUNCTION	0.05	0.32	84.18	0 11:57	0.32
J14	JUNCTION	0.75	1.46	83.56	0 12:20	1.46
J15	JUNCTION	0.09	0.16	83.17	0 23:59	0.16
J16	JUNCTION	0.22	0.35	82.89	1 00:00	0.35
J17	JUNCTION	0.26	0.50	82.28	0 14:12	0.50
J18	JUNCTION	0.30	0.50	84.24	0 13:06	0.50
J19	JUNCTION	1.09	1.46	84.24	0 13:07	1.46
J2	JUNCTION	0.09	0.59	82.03	0 11:56	0.59
J20	JUNCTION	0.54	0.84	83.62	0 13:56	0.84
J21	JUNCTION	1.10	1.50	83.74	0 12:30	1.50
J22	JUNCTION	1.00	1.40	83.64	0 12:19	1.40
J23	JUNCTION	0.94	1.41	83.62	0 13:55	1.41
J24	JUNCTION	0.09	0.30	82.51	0 14:10	0.30
J25	JUNCTION	1.05	1.46	83.70	0 13:01	1.46
J26	JUNCTION	1.00	1.40	83.64	0 12:26	1.40
J27	JUNCTION	1.02	1.50	83.68	0 11:57	1.50
J28	JUNCTION	0.67	1.37	83.56	0 12:20	1.37
J29	JUNCTION	0.68	0.99	83.17	1 00:00	0.99
J3	JUNCTION	0.49	0.85	81.44	0 13:38	0.85
J30	JUNCTION	0.67	1.37	83.56	0 12:20	1.37
J31	JUNCTION	0.26	0.37	83.18	0 23:59	0.37
J32	JUNCTION	0.03	0.09	82.89	1 00:00	0.09
J33	JUNCTION	0.49	0.70	82.89	1 00:00	0.70
J34	JUNCTION	0.00	0.00	82.19	0 00:00	0.00
J35	JUNCTION	0.00	0.00	81.88	0 00:00	0.00

J36	JUNCTION	0.19	0.40	82.28	0	14:12	0.40
J4	JUNCTION	0.28	0.47	84.21	0	12:01	0.47
J5	JUNCTION	0.06	0.39	82.68	0	11:55	0.39
J6	JUNCTION	0.08	0.56	82.08	0	11:57	0.56
J7	JUNCTION	0.46	0.80	81.44	0	13:39	0.80
J8	JUNCTION	0.06	0.19	84.05	0	12:00	0.19
J9	JUNCTION	1.09	1.50	83.64	0	12:19	1.50
BerryMunDrain	OUTFALL	0.23	0.30	82.36	0	11:54	0.30
CrowderMunDrain	OUTFALL	0.00	0.00	80.00	0	00:00	0.00
FergusonMunDrain	OUTFALL	0.16	0.29	82.14	0	14:12	0.29
SU1	STORAGE	0.95	1.44	81.44	0	13:39	1.44

****
Node Inflow Summary
****

Node	Type	Maximum Lateral Inflow CMS	Maximum Total Inflow CMS	Time of Max Occurrence days	hr:min	Lateral Inflow Volume 10^6 ltr	Total Inflow Volume 10^6 ltr	Flow Balance Error Percent
J1	JUNCTION	0.671	0.671	0	11:54	2.13	2.13	0.088
J10	JUNCTION	0.656	0.656	0	11:54	6.91	6.94	0.274
J11	JUNCTION	0.492	0.492	0	11:54	4.86	4.89	5.548
J12	JUNCTION	0.000	0.164	0	14:01	0	3.66	0.156
J13	JUNCTION	0.932	0.932	0	11:54	3.38	3.38	-0.158
J14	JUNCTION	0.000	0.436	0	11:57	0	10.7	0.753
J15	JUNCTION	0.207	0.207	0	11:54	0.519	0.57	16.524
J16	JUNCTION	0.111	0.111	0	11:54	0.273	0.279	64.753
J17	JUNCTION	0.000	0.163	0	14:08	0	3.67	0.275
J18	JUNCTION	0.000	0.065	0	11:56	0	0.0766	165.060
J19	JUNCTION	0.000	0.212	0	11:53	0	4.56	9.514
J2	JUNCTION	0.897	1.527	0	11:55	2.97	5.1	-0.375
J20	JUNCTION	0.000	0.174	0	13:08	0	4.16	4.205
J21	JUNCTION	0.000	0.584	0	12:00	0	6.87	18.951
J22	JUNCTION	0.000	0.153	0	12:31	0	5.46	1.419

```
  J23                  JUNCTION     0.000    0.169     0  13:35           0
3.99       8.947
  J24                  JUNCTION     0.000    0.165     0  13:55           0
3.67       0.052
  J25                  JUNCTION     0.000    0.337     0  12:00           0
3.29      33.644
  J26                  JUNCTION     0.000    0.186     0  12:18           0
2.68       3.386
  J27                  JUNCTION     0.000    0.875     0  11:57           0
3.38      26.161
  J28                  JUNCTION     0.000    0.404     0  11:57           0
2.47       1.390
  J29                  JUNCTION     0.000    0.163     0  12:15           0
0.629    2036.253
  J3                   JUNCTION     0.000    1.532     0  11:58           0
5.12       1.809
  J30                  JUNCTION     0.000    0.104     0  12:19           0
0.266      15.423
  J31                  JUNCTION     0.000    0.021     0  11:53           0
0.0603     180.606
  J32                  JUNCTION     0.000    0.002     0  13:36           0
0.01    1220.541
  J33                  JUNCTION     0.000    0.093     0  11:56           0
0.159    2922.740
  J34                  JUNCTION     0.000    0.000     0  00:00           0
0       0.000 ltr
  J35                  JUNCTION     0.000    0.000     0  00:00           0
0       0.000 ltr
  J36                  JUNCTION     0.000    0.026     0  13:00           0
0.0186      50.324
  J4                   JUNCTION     0.000    0.039     0  11:53           0
0.0517     105.139
  J5                   JUNCTION     0.699    0.699     0  11:54        2.17
2.17       0.100
  J6                   JUNCTION     0.692    1.343     0  11:55        2.14
4.31      -0.415
  J7                   JUNCTION     0.000    1.340     0  11:58           0
4.32       1.831
  J8                   JUNCTION     0.354    0.354     0  11:54        3.15
3.15      -0.182
  J9                   JUNCTION     0.379    0.488     0  12:56        6.58
14.4       1.248
  BerryMunDrain        OUTFALL      0.000    0.291     0  12:20           0
10.4       0.000
  CrowderMunDrain      OUTFALL      0.000    0.162     0  13:39           0
7.84       0.000
  FergusonMunDrain     OUTFALL      0.000    0.163     0  14:12           0
3.64       0.000
  SU1                  STORAGE      0.000    2.780     0  12:00           0
9.28       3.911


  **********************
  Node Surcharge Summary
  **********************

  Surcharging occurs when water rises above the top of the highest conduit.
  -------------------------------------------------------------------------
                                                Max. Height   Min. Depth
```

Node	Type	Hours Surcharged	Above Crown Meters	Below Rim Meters
J21	JUNCTION	3.50	0.000	0.000
J27	JUNCTION	0.25	0.000	0.000
J9	JUNCTION	10.52	0.000	0.000

****
Node Flooding Summary
****

Flooding refers to all water that overflows a node, whether it ponds or not.

Node	Hours Flooded	Maximum Rate CMS	Time of Max Occurrence days hr:min	Total Flood Volume 10^6 ltr	Maximum Ponded Depth Meters
J21	3.46	0.096	0 12:30	0.379	0.000
J27	0.25	0.471	0 11:57	0.218	0.000
J9	10.50	0.382	0 12:36	5.717	0.000

****
Storage Volume Summary
****

Storage Unit	Average Volume 1000 m³	Avg Pcnt Full	Evap Pcnt Loss	Exfil Pcnt Loss	Maximum Volume 1000 m³	Max Pcnt Full	Time of Max Occurrence days hr:min	Maximum Outflow CMS
SU1	1.736	12.9	0.0	0.0	3.096	23.1	0 13:39	0.162

****
Outfall Loading Summary
****

Outfall Node	Flow Freq Pcnt	Avg Flow CMS	Max Flow CMS	Total Volume 10^6 ltr
BerryMunDrain	95.90	0.174	0.291	10.359
CrowderMunDrain	95.34	0.122	0.162	7.839
FergusonMunDrain	68.66	0.102	0.163	3.643
System	86.63	0.399	0.572	21.840

****
Link Flow Summary
****

Link	Type	Maximum |Flow| CMS	Time of Max Occurrence days	hr:min	Maximum |Veloc| m/sec	Max/ Full Flow	Max/ Full Depth
C1	CONDUIT	0.649	0	11:55	0.54	0.12	0.49
C10_1	CONDUIT	0.039	0	11:53	0.07	0.00	0.25
C10_2	CONDUIT	0.065	0	11:56	0.08	0.00	0.42
C11_1	CONDUIT	0.212	0	11:53	0.06	0.01	0.74
C11_3	CONDUIT	0.169	0	13:35	0.41	0.01	0.75
C11_4	CONDUIT	0.164	0	14:01	0.28	0.01	0.27
C12_1	CONDUIT	0.875	0	11:57	0.21	0.04	0.61
C12_2	CONDUIT	0.375	0	12:10	0.11	0.02	0.94
C13_1	CONDUIT	0.154	0	12:00	0.25	0.01	0.38
C13_2	CONDUIT	0.104	0	12:19	0.03	0.01	0.94
C14_1	CONDUIT	0.021	0	11:53	0.04	0.00	0.18
C14_2	CONDUIT	0.002	0	13:36	0.01	0.00	0.15
C15_1	CONDUIT	0.093	0	11:56	0.12	0.01	0.35
C15_3	CONDUIT	0.000	0	00:00	0.00	0.00	0.00
C15_4	CONDUIT	0.026	0	13:00	0.12	0.00	0.30
C17	CONDUIT	0.163	0	14:12	2.32	1.68	0.98
C19	CONDUIT	0.203	0	22:50	2.88	3.85	1.00
C2	CONDUIT	1.532	0	11:58	0.99	0.28	0.57
C20	CONDUIT	0.291	0	12:20	4.12	5.48	1.00
C3	CONDUIT	1.489	0	12:00	0.59	0.28	0.92
C4	CONDUIT	0.671	0	11:55	0.59	0.12	0.48
C5	CONDUIT	1.340	0	11:58	0.95	0.25	0.54
C6	CONDUIT	1.295	0	12:01	0.53	0.24	0.90
C7	CONDUIT	0.163	0	14:08	2.31	1.53	1.00
C8	CONDUIT	0.337	0	12:00	0.22	0.02	0.52
C8_2	CONDUIT	0.186	0	12:18	0.03	0.01	0.97
C9_1	CONDUIT	0.584	0	12:00	0.25	0.03	0.56
C9_2	CONDUIT	0.153	0	12:30	0.02	0.01	0.97
C16	ORIFICE	0.162	0	13:39			1.00
W1	WEIR	0.000	0	00:00			0.00
W10	WEIR	0.000	0	00:00			0.00
W2	WEIR	0.174	0	13:08			1.00
W3	WEIR	0.153	0	12:31			1.00
W4	WEIR	0.165	0	13:55			1.00
W5	WEIR	0.172	0	12:18			1.00
W6	WEIR	0.404	0	11:57			1.00
W7	WEIR	0.103	0	12:20			0.78
W8	WEIR	0.000	0	00:00			0.00
W9	WEIR	0.000	0	00:00			0.00

****
Flow Classification Summary
****

Conduit	Adjusted /Actual Length	Fraction of Time in Flow Class Dry	Up Dry	Down Dry	Sub Crit	Sup Crit	Up Crit	Down Crit	Norm Ltd	Inlet Ctrl
C1	1.00	0.05	0.00	0.00	0.95	0.00	0.00	0.00	0.93	0.00
C10_1	1.00	0.05	0.00	0.00	0.95	0.00	0.00	0.00	0.13	0.00
C10_2	1.00	0.00	0.49	0.00	0.51	0.00	0.00	0.00	0.00	0.00
C11_1	1.00	0.00	0.00	0.00	1.00	0.00	0.00	0.00	0.39	0.00
C11_3	1.00	0.50	0.00	0.00	0.50	0.00	0.00	0.00	0.01	0.00
C11_4	1.00	0.54	0.00	0.00	0.46	0.00	0.00	0.00	0.34	0.00
C12_1	1.00	0.05	0.00	0.00	0.95	0.00	0.00	0.00	0.91	0.00
C12_2	1.00	0.06	0.38	0.00	0.56	0.00	0.00	0.00	0.00	0.00
C13_1	1.00	0.05	0.00	0.00	0.95	0.00	0.00	0.00	0.39	0.00
C13_2	1.00	0.06	0.39	0.00	0.56	0.00	0.00	0.00	0.00	0.00
C14_1	1.00	0.05	0.00	0.00	0.95	0.00	0.00	0.00	0.36	0.00
C14_2	1.00	0.05	0.51	0.00	0.44	0.00	0.00	0.00	0.00	0.00
C15_1	1.00	0.05	0.00	0.00	0.95	0.00	0.00	0.00	0.39	0.00
C15_3	1.00	1.00	0.00	0.00	0.00	0.00	0.00	0.00	0.00	0.00
C15_4	1.00	0.54	0.00	0.00	0.46	0.00	0.00	0.00	0.00	0.00
C17	1.00	0.54	0.00	0.00	0.19	0.27	0.00	0.00	0.15	0.00
C19	1.00	0.05	0.00	0.00	0.93	0.02	0.00	0.00	0.19	0.00
C2	1.00	0.05	0.00	0.00	0.95	0.00	0.00	0.00	0.50	0.00
C20	1.00	0.06	0.00	0.00	0.94	0.00	0.00	0.00	0.00	0.00
C3	1.00	0.06	0.00	0.00	0.94	0.00	0.00	0.00	0.40	0.00
C4	1.00	0.05	0.00	0.00	0.95	0.00	0.00	0.00	0.93	0.00
C5	1.00	0.05	0.00	0.00	0.95	0.00	0.00	0.00	0.50	0.00
C6	1.00	0.06	0.00	0.00	0.94	0.00	0.00	0.00	0.41	0.00
C7	1.00	0.54	0.00	0.00	0.16	0.29	0.00	0.02	0.00	0.00
C8	1.00	0.05	0.00	0.00	0.95	0.00	0.00	0.00	0.91	0.00
C8_2	1.00	0.05	0.40	0.00	0.55	0.00	0.00	0.00	0.00	0.00

C9_1	1.00	0.05	0.00	0.00	0.95	0.00	0.00	0.00	0.90	0.00
C9_2	1.00	0.05	0.40	0.00	0.55	0.00	0.00	0.00	0.00	0.00

****
Conduit Surcharge Summary
****

Conduit	Hours Full Both Ends	Hours Full Upstream	Hours Full Dnstream	Hours Above Full Normal Flow	Hours Capacity Limited
C12_1	0.01	0.01	0.25	0.01	0.01
C17	0.01	2.69	0.01	4.25	0.01
C19	12.19	12.27	12.19	12.34	12.17
C20	12.08	12.19	12.08	12.30	12.08
C3	0.01	0.01	10.09	0.01	0.01
C6	0.01	0.01	10.09	0.01	0.01
C7	2.69	3.02	2.69	3.61	2.69
C8_2	0.01	0.01	10.50	0.01	0.01
C9_1	0.01	0.01	3.46	0.01	0.01
C9_2	0.01	0.01	10.50	0.01	0.01

Analysis begun on: Fri Feb 21 12:12:01 2025
Analysis ended on: Fri Feb 21 12:12:02 2025
Total elapsed time: 00:00:01

APPENDIX

F

Proposed SWM Pond Drawings

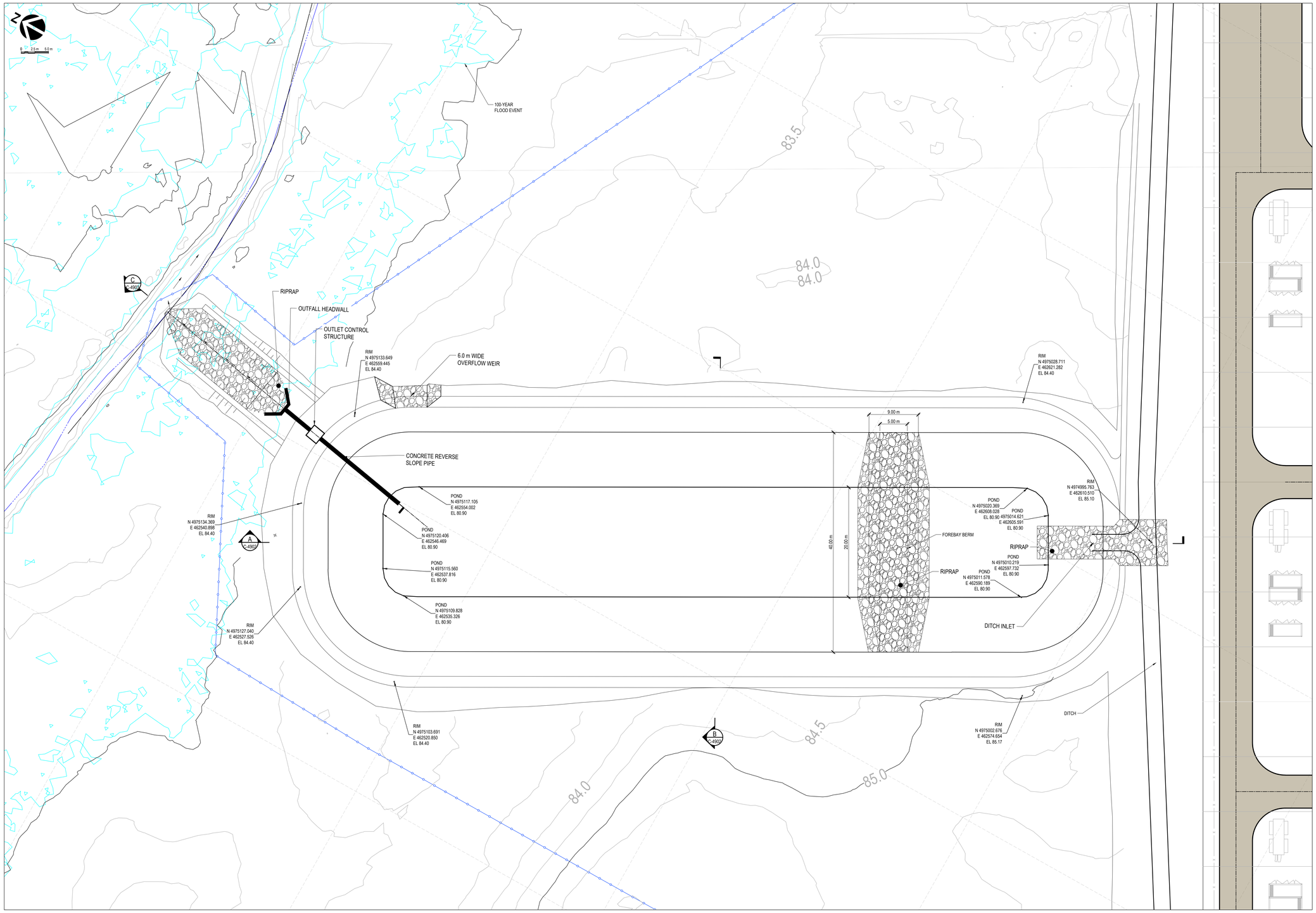

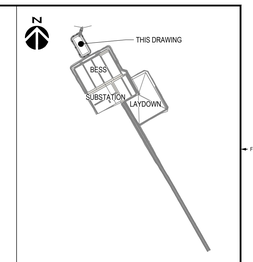

KEY PLAN

SCALE: NTS

NOTES:

1. HORIZONTAL DATUM

   PROJECTION: UNIVERSAL TRANSVERSE MERCATOR (UTM), ZONE 18N
   DATUM: NAD 83 (CSRS) (2010.0), METER

2. ALL DIMENSIONS ARE IN METER, UNLESS OTHERWISE INDICATED.

3. THIS DRAWING SHALL BE READ IN CONJUNCTION WITH DRAWING
   -C-4003 - GENERAL NOTES, (TO COME)
   -C-4105 - DRAINAGE LAYOUT AND DETAILS.
   -C-4902 - STORM WATER SECTION AND DETAILS

LEGEND

SYMBOL	DESCRIPTION
	EXISTING CONTOUR LINES
	EXISTING PROPERTY LINES
	EXISTING FENCE
	EXISTING U/G TELEPHONE
	EXISTING U/G GAS LINE
	EXISTING WATER WELL
	EXISTING LIGHT POLE
	EXISTING TREE
	LEASED PROJECT AREA
	CSP CULVERT
	DITCH
	SWALE
	SURFACE RUNOFF FLOW DIRECTION
	PROPERTY LINE SETBACK
	LIMIT OF DISTURBANCE
	OVERHEAD POWERLINE
	PROPOSED ROAD
	PROPOSED FENCE
	SILT FENCE
	NOISE BARRIER

IN PROGRESS

THIS DOCUMENT MUST NOT BE USED FOR CONSTRUCTION (OR FABRICATION OR INSTALLATION)

REFERENCE DRAWING:

REF #	TITLE
C-4902	STORMWATER - SECTION AND DETAILS

REFERENCE DRAWING:

REF #	TITLE

ISSUED FOR - REVISION:

RV.	DATE	DESCRIPTION	BY
0B	2025-05-27	RE-ISSUED FOR ECA DESIGN SUBMISSION	M.E.
0A	2025-03-05	ISSUED FOR ECA DESIGN SUBMISSION	M.E.

ISSUED FOR - REVISION:

RV.	DATE	DESCRIPTION	BY

SEAL:

DISCLAIMER: COPYRIGHT:
THIS DRAWING AND DESIGN IS COPYRIGHT PROTECTED WHICH SHALL NOT BE USED, REPRODUCED OR REVISED WITHOUT WRITTEN PERMISSION BY WSP CANADA INC. THE CONTRACTOR SHALL CHECK AND VERIFY ALL DIMENSIONS AND UTILITY LOCATIONS AND REPORT ALL ERRORS AND OMISSIONS PRIOR TO BEGINNING WORK.
THIS DRAWING IS NOT TO BE SCALED.

ORIGINAL SCALE: 1:250
PREPARED BY: J. DORRINGTON
ASSISTED BY: M. EDWARDS
EDITED BY: --
ASSISTED BY: --
DRAWN BY: F. SANGALANG
DISCIPLINE: CIVIL

DATE: 2025-03-05
IF THIS BAR IS NOT 25 mm LONG, ADJUST YOUR PLOTTING SCALE
25mm

wsp
405 18th STREET SE, MAIN FLOOR
CALGARY, ALBERTA, CANADA T2E 6J5
TEL.: 403-248-9463 | WWW.WSP.COM

PROJECT #: CA0047941.1010

CLIENT: Potentia

CLIENT REF. #: --

TITLE:

BESS

STORWATER - RETENTION POND PLAN

PROJECT:

SKYVIEW
390 MW BESS PROJECT

DRAWING #: C-4901

RV.: 0B

COPYRIGHT: THE ORIGINAL OF THE TECHNOLOGY BASED DOCUMENT BEFORE REPRINTING EDITS IN ARCHITECTURE AND WILL BE REVISED BY WSP FOR A MINIMUM OF TEN YEARS. SINCE THE FILE TRANSMITTED IS NOW OUT OF WSP'S CONTROL, NO FURTHER REPRODUCTIONS OR MODIFICATIONS TO THE DOCUMENT MAY BE MADE BY OTHERS WITHOUT THE EXPRESS WRITTEN CONSENT OF WSP.

CTB: —
PRINTED ON: May 27, 2025 1:19:19 PM FILE NAME: ISS AN H:\CA0047941.1010_SKYVIEW_BESS\CA0047941.1010_SKYVIEW_BESS\DRAWINGS\CA0047941.1010-SKYVIEW-C-4901.dwg

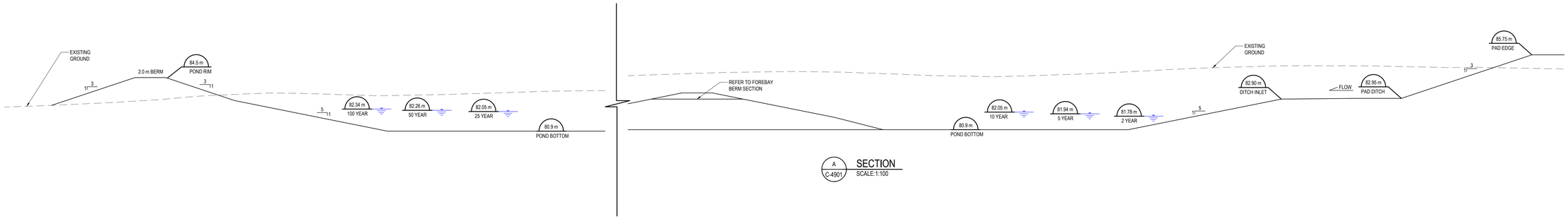

A C-4901 SECTION
SCALE:1:100

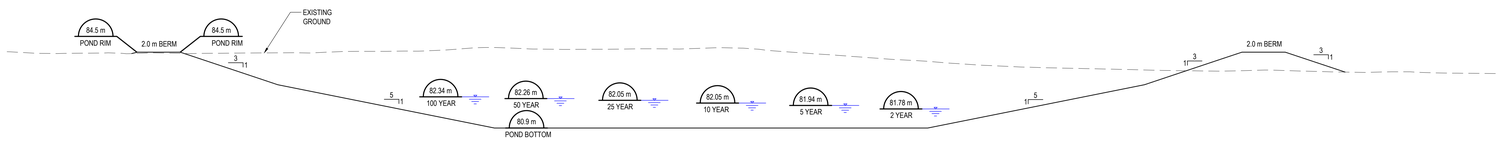

B C-4901 SECTION
SCALE:1:100

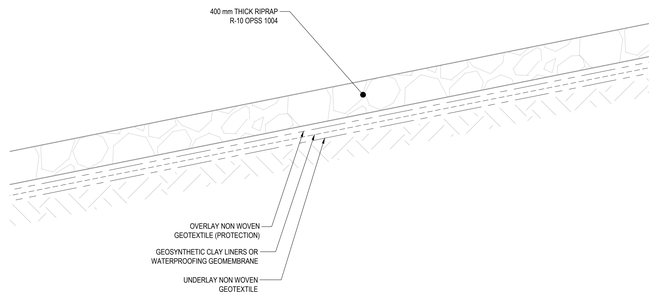

DITCH INLET DETAIL
SCALE:1:20

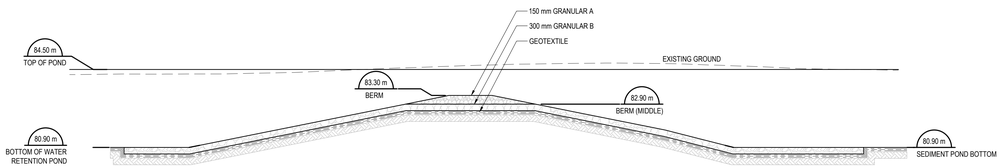

FOREBAY BERM TYPICAL SECTION
SCALE:1:100

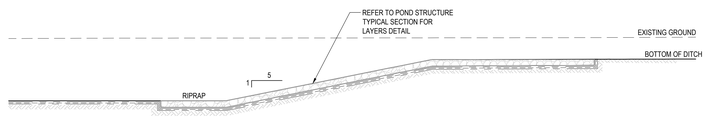

DITCH INLET TYPICAL SECTION
SCALE:1:100

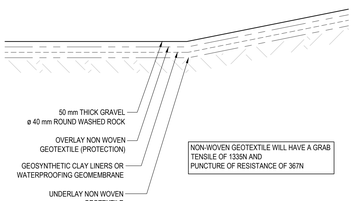

POND STRUCTURE TYPICAL SECTION
SCALE:1:20

wsp
IN PROGRESS

THIS DOCUMENT MUST NOT BE USED FOR CONSTRUCTION
(OR FABRICATION OR INSTALLATION)

REFERENCE DRAWING:		REFERENCE DRAWING:	
C-4901	STORMWATER -RETENTION POND PLAN		
REF #	TITLE	REF #	TITLE

ISSUED FOR - REVISION:				ISSUED FOR - REVISION:			
0B	2025-05-27	RE-ISSUED FOR ECA DESIGN SUBMISSION	M.E.				
0A	2025-03-05	ISSUED FOR ECA DESIGN SUBMISSION	M.E.				
REV.	DATE	DESCRIPTION	BY	REV.	DATE	DESCRIPTION	BY

SEAL:

DISCLAIMER: COPYRIGHT
THIS DRAWING AND DESIGN IS COPYRIGHT PROTECTED WHICH SHALL NOT BE USED, REPRODUCED OR REVISED WITHOUT WRITTEN PERMISSION BY WSP CANADA INC. THE CONTRACTOR SHALL CHECK AND VERIFY ALL DIMENSIONS AND UTILITY LOCATIONS AND REPORT ALL ERRORS AND OMISSIONS PRIOR TO BEGINNING WORK.
THIS DRAWING IS NOT TO BE SCALED.

ORIGINAL SCALE: 1:500
PREPARED BY: J. DORRINGTON
ASSISTED BY: M. EDWARDS
EDITED BY: --
ASSISTED BY: --
DRAWN BY: F. SANGALANG
DISCIPLINE: CIVIL
DATE: 2025-03-05
IF THIS BAR IS NOT 25 mm LONG, ADJUST YOUR PLOTTING SCALE.
25mm

wsp
405 18th STREET SE, MAIN FLOOR
CALGARY, ALBERTA, CANADA T2E 6J5
TEL: 403-248-9463 | WWW.WSP.COM

PROJECT #: CA0047941.1010
CLIENT: Potentia
CLIENT REF. #: --

TITLE: **BESS**
STORWATER - RETENTION POND SECTIONS

PROJECT: SKYVIEW
390 MW BESS PROJECT

DRAWING #: C-4902
REV.: 0B

CAUTION: THE ORIGINAL OF THE TECHNOLOGY DESCRIBED IN THIS DOCUMENT HAS BEEN PLACED IN THE HANDS OF A PRINTER AND ACCEPTED AS GOOD AND TRUE. ALTERATIONS TO THE DOCUMENT AFTER THIS DATE WITHOUT THE CONSENT OF A QUALIFIED ENGINEER MAY BE DANGEROUS AND MAY CAUSE INJURY OR DEATH TO PERSONS.

CTB: ---
PRINTED ON: May 27, 2025 4:21:31 PM
FILE NAME: ISO_A0_H:\CADD\PNA\1970_SKYVIEW_BESS\C0020259_TRY\LDRAWING\CADD\PN1-1010-D18-C-4902.DWG

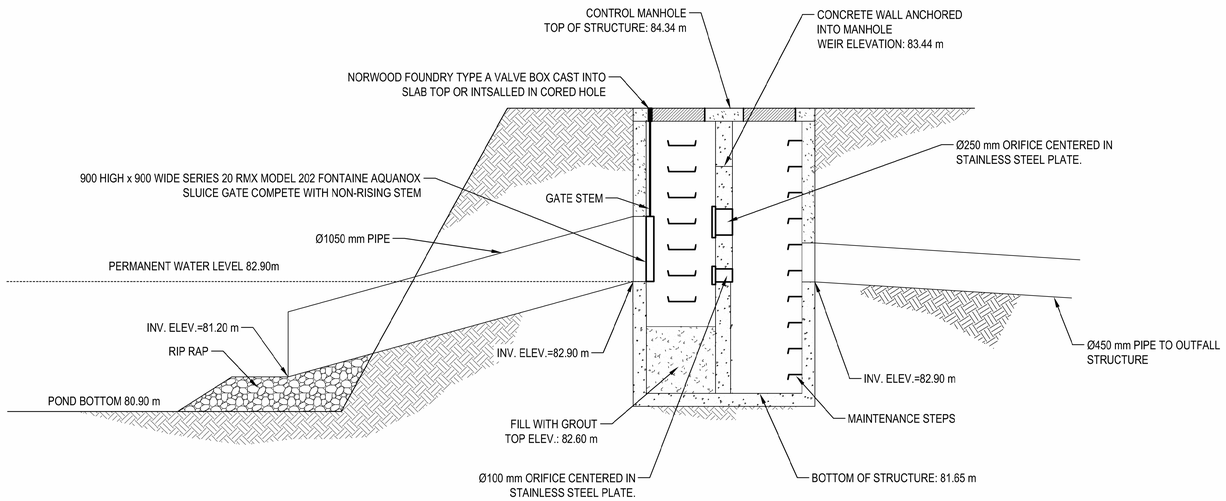

C 4901 OUTLET STRUCTURE SECTION
NTS

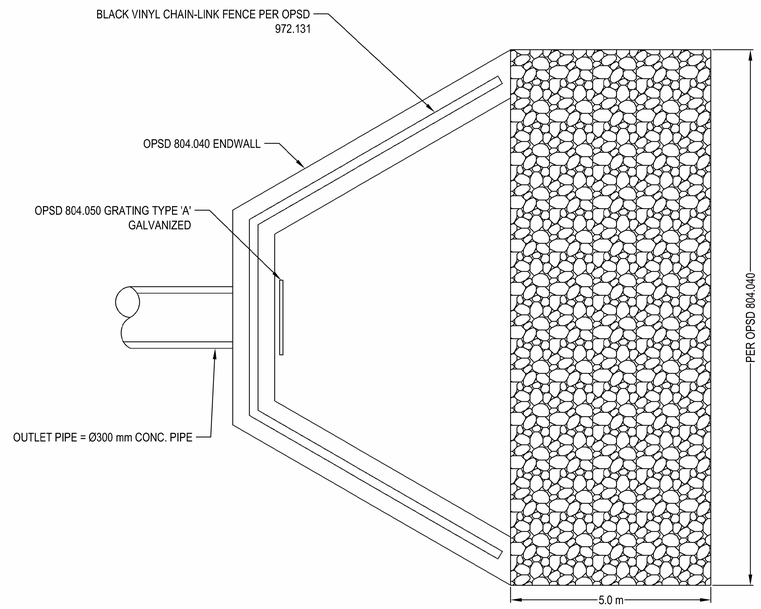

TYPICAL OUTLET HEADWALL
TOP VIEW
N.T.S.

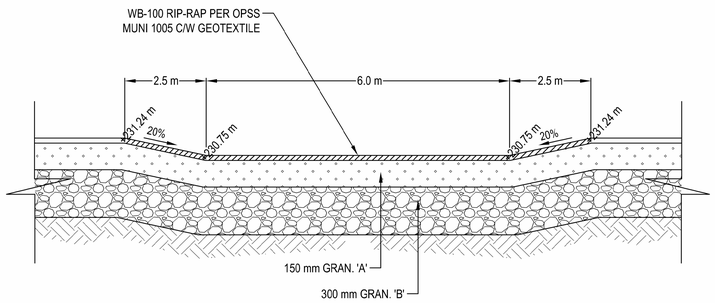

TYPICAL OVERFLOW WEIR
N.T.S.

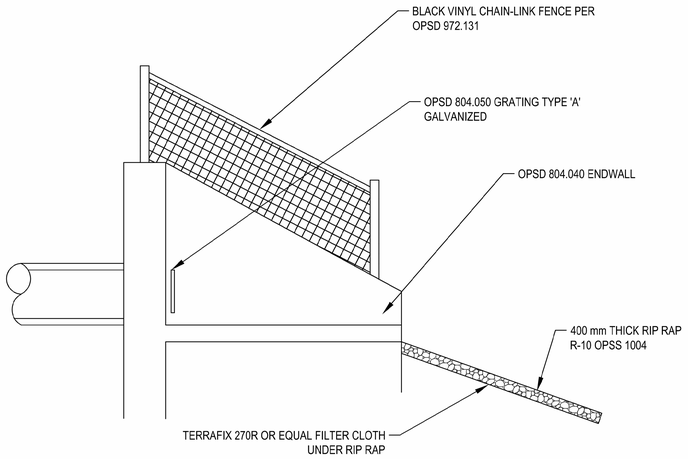

TYPICAL OUTLET HEADWALL
SIDE VIEW
N.T.S.

IN PROGRESS

THIS DOCUMENT MUST NOT BE USED FOR CONSTRUCTION (OR FABRICATION OR INSTALLATION)

REFERENCE DRAWING		REFERENCE DRAWING	
--	--		
REF #	TITLE	REF #	TITLE

ISSUED FOR - REVISION				ISSUED FOR - REVISION			
0B	2025-05-27	RE-ISSUED FOR ECA DESIGN SUBMISSION	M.E.				
0A	2025-03-05	ISSUED FOR ECA DESIGN SUBMISSION	M.E.				
REV.	DATE	DESCRIPTION	BY	REV.	DATE	DESCRIPTION	BY

SEAL:

DISCLAIMER: COPYRIGHT
THIS DRAWING AND DESIGN IS COPYRIGHT PROTECTED WHICH SHALL NOT BE USED, REPRODUCED OR REVISED WITHOUT WRITTEN PERMISSION BY WSP CANADA INC. THE CONTRACTOR SHALL CHECK AND VERIFY ALL DIMENSIONS AND UTILITY LOCATIONS AND REPORT ALL ERRORS AND OMISSIONS TO WSP CANADA INC. PRIOR TO CONSTRUCTION.
THIS DRAWING IS NOT TO BE SCALED.

ORIGINAL SCALE: N.T.S.
PREPARED BY: J. DORRINGTON
ASSISTED BY: M. EDWARDS
EDITED BY: --
ASSISTED BY: --
DRAWN BY: F. SANGALANG
DISCIPLINE: **CIVIL**
DATE: 2025-03-05
IF THIS BAR IS NOT 25 mm LONG, ADJUST YOUR PLOTTING SCALE
25mm

455 - 9th STREET SE, MAIN FLOOR
CALGARY, ALBERTA, CANADA T2E 8J5
TEL.: 403-248-9463 | WWW.WSP.COM

PROJECT # CA0047941.1010

CLIENT: Potentia
CLIENT REF. #: --

TITLE: **BESS**
STORWATER - RETENTION POND DETAILS

PROJECT: SKYVIEW
390 MW BESS PROJECT

DRAWING #: **C-4903**
REV. **0B**

NOTICE: THE ORIGINAL OF THIS TECHNOLOGY BASED DOCUMENT SENT HEREWITH HAS BEEN AUTHENTICATED AND WILL BE RETAINED BY WSP FOR A MINIMUM OF TEN YEARS. SINCE THE FILE TRANSMITTED IS SUBJECT TO UNINTENTIONAL ALTERATION, THE ORIGINAL OF THIS DOCUMENT, SEALED AND SIGNED, SHALL PREVAIL THE PRINTED COPY. WSP DOES NOT ACCEPT LIABILITY FOR DAMAGES SUFFERED BY OTHERS WHO MAY RELY ON THE DOCUMENT.

CTB: ---
PRINTED ON: May 27, 2025 10:52:08 AM FILE NAME: 55-16_ENVIRO_CIVIL\PROJECT\CA0047941.1010_SKYVIEW_BESS\CAD\02XX_TRA\DRAWING\CA0047941.1010-SVB-C-4903-0B.DWG

wsp.com